Technical data
Hydraulic lift crane

LR 1300 SX
Litronic®

Complies with ANSI/ASME B 30.5

1006.01

LIEBHERR

Dimensions

Basic machine with undercarriage

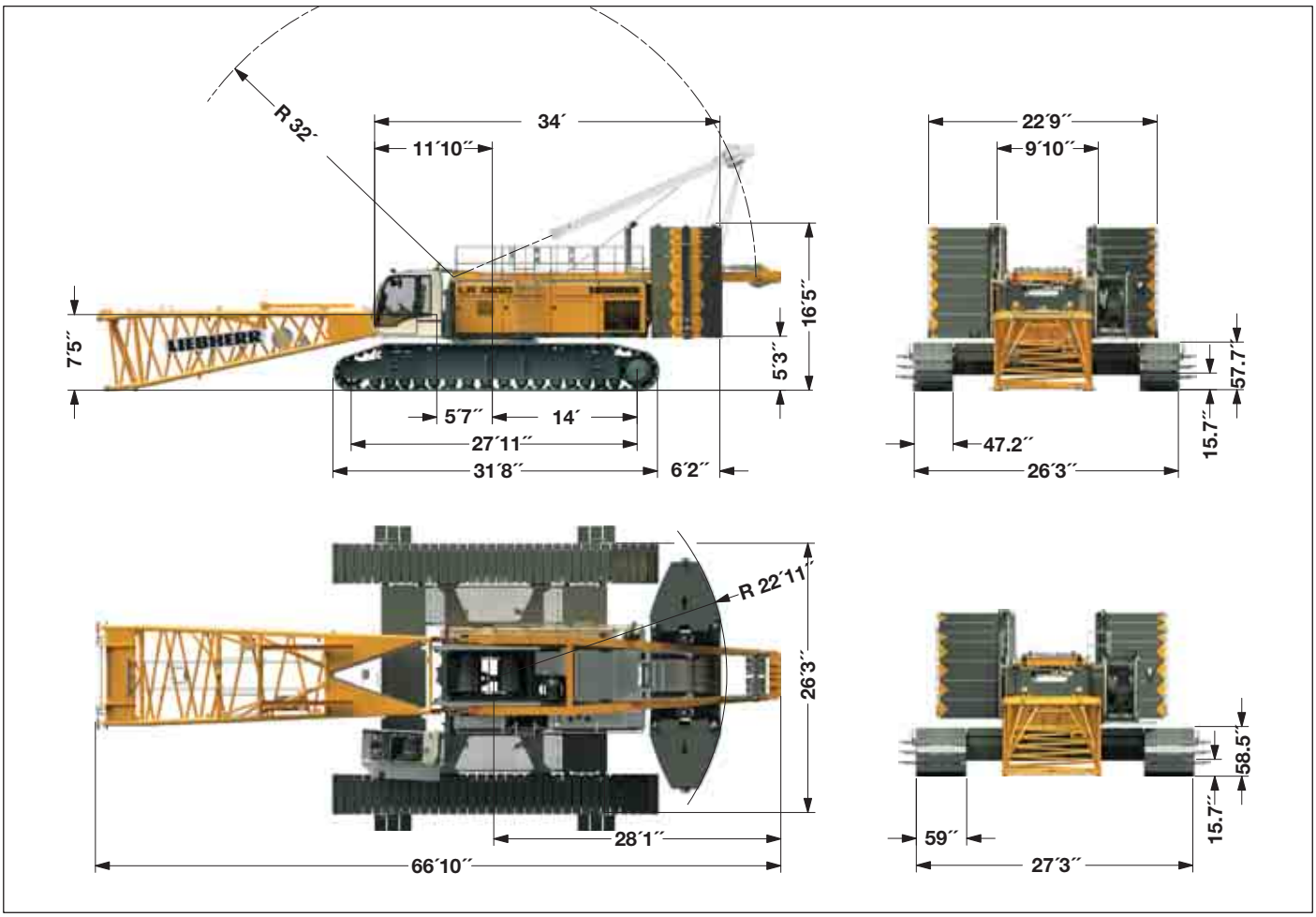

Operating weight

The operating weight includes the basic machine with crawlers, 2 main winches 33,725 lbf and 66 ft main boom, consisting of A-frame, boom foot (33 ft), boom head (23 ft), boom extension (10 ft), 273,400 lbs basic counterweight, 125,700 lbs carbody conterweight and 661,400 lbs hook block.

Total weight ——— approx. 639,400 lbs

Ground pressure

Ground bearing pressure ——— 20.6 PSI

Equipment

Main boom (No. 2821.xx) max. length ——— 302 ft
Luffing jib (No. 2316.xx) max. length ——— 371 ft
Max. combination ——— main boom 184 ft and luffing jib 371 ft
Fixed jib (No. 0906.xx) ——— 23 ft
Fixed jib (No. 1507.xx) ——— 26.2 ft
Auxiliary jib ——— 79,400 lbs

Remarks

1. The lifting capacities stated are valid for lifting operation only (corresponding with crane classification according to F.E.M. 1.001. crane group A1).
2. Crane standing on firm, horizontal ground.
3. The weight of the lifting device (hoisting ropes, hook block, shackle etc.) must be deducted form the gross lifting capacity to obtain a net lifting value.
4. Additional equipment on boom (e.g. boom walkways, auxiliary jib) must be deducted to get the net lifting capacity.
5. For max. wind speed please refer to lift chart in operator‘s cab or manual.
6. Working radii are measured from center of swing and under load.
7. The lifting capacities are valid for 360 degrees of swing.
8. Calculation of stability under load is based on ANSI/ASME B 30.5 load ratings as well as ISO 4305 Table 2 and is tested according to SAE J765.
9. Loads for calculation of structures are corresponding to F.E.M. 1.001-1998 and are tested according to SAE J987.

Transport dimensions and weights

Basic machine and boom (No. 2821.xx)

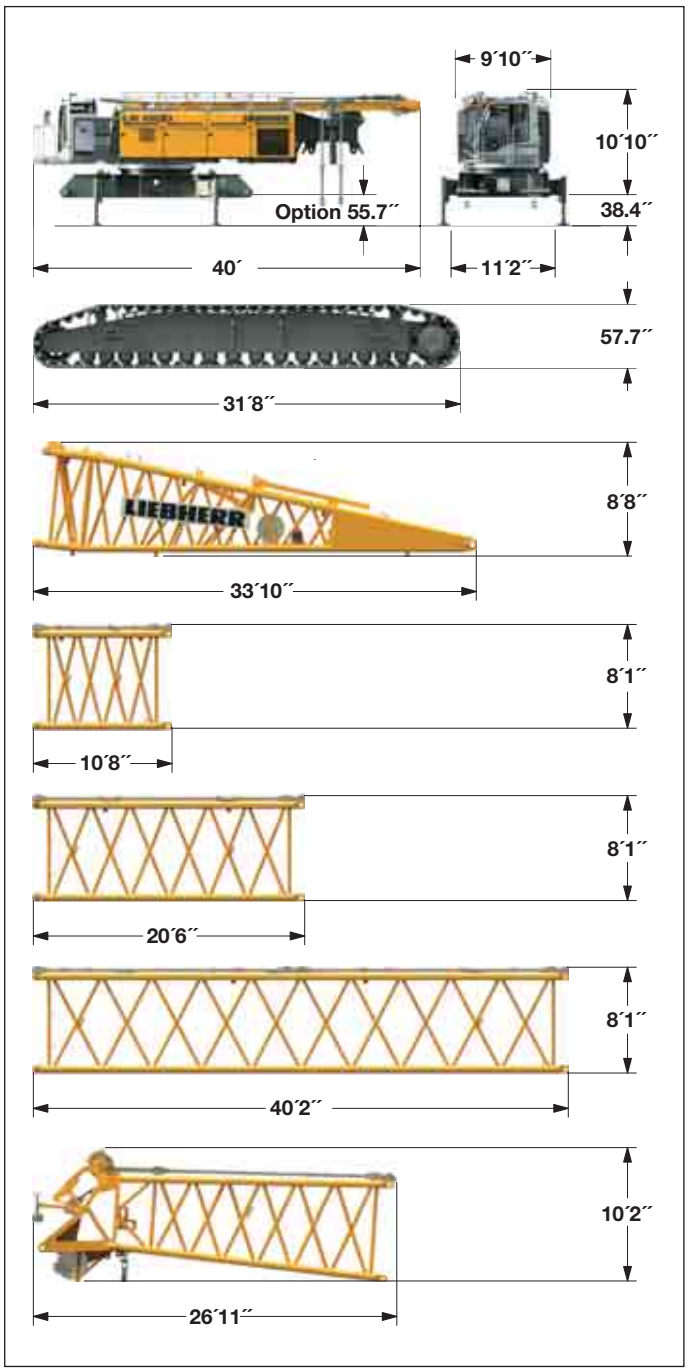

Basic machine

with A-frame, 2x 33,725 lbf crane winches, without boom foot, basic counterweight and crawlers	
Width	9´10´´
Weight without hoist rope	101,450 lbs
Weight of hoist rope	2.75 lbs/ft

Crawler 2x

	Optional	Standard
Flat track shoes	59 inch	47.2 inch
Width	59 inch	55.1 inch
Weight	57,765 lbs	49,275 lbs

Boom foot (No. 2821.30)

Width	2970 mm
Weight without winch	5700 kg
Weight incl. winch and rope	7400 kg

Boom section (No. 2821.30) 10 ft

Width	9´9´´
Weight incl. main boom pendants	3,090 lbs
Weight incl. main boom and luffing jib pendants	3,310 lbs

Boom section (No. 2821.30) 20 ft

Width	9´9´´
Weight incl. main boom pendants	4,700 lbs
Weight incl. main boom and luffing jib pendants	5,100 lbs

Boom section (No. 2821.30) 40 ft

Width	9´9´´
Weight incl. main boom pendants	8,290 lbs
Weight incl. main boom and luffing jib pendants	9,090 lbs

Boom head (No. 2821.24)

Width	9´9´´
Weight incl. main boom pendants	11,905 lbs

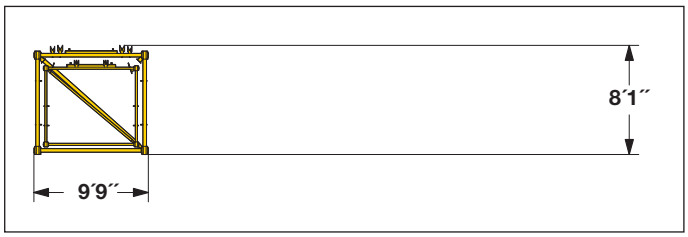

Boom - luffing jib transport option

No. 2821.xx/2316.xx	40/40	20/20	10/10 ft
Length	41´	20´6´´	10´8´´
Weight*	13,060	7,200	4,635 kg

*) Weights depend on the equipment installed

Transport dimensions and weights

Luffing jib (No. 2316.xx)

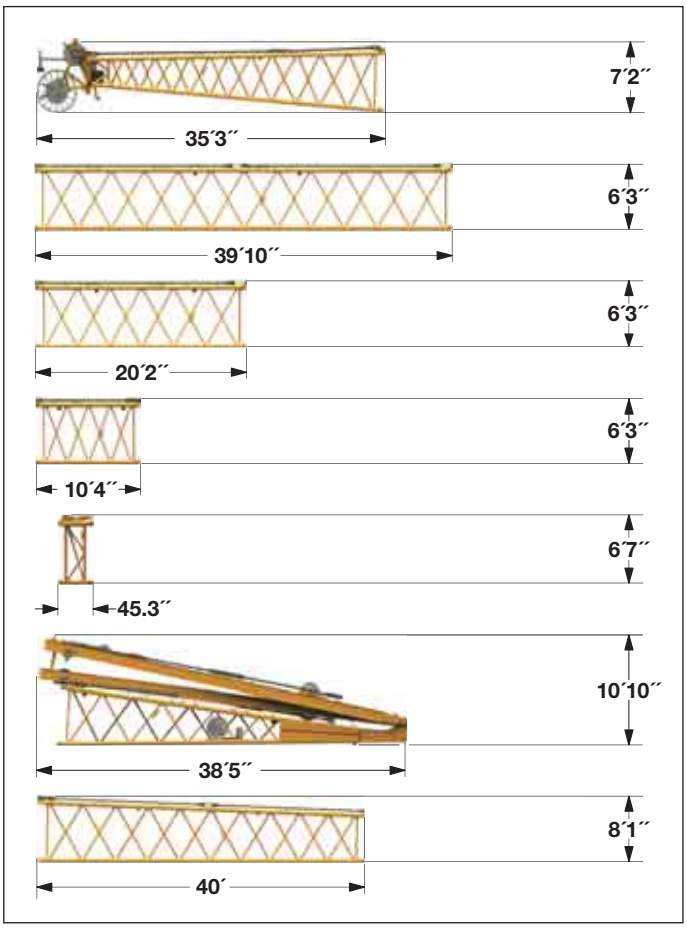

Luffing jib head (No. 2316.20)	
Width	8´
Weight*	5,070 lbs

Luffing jib section (No. 2316.20)	40 ft
Width	8´
Weight*	3.970 lbs

Luffing jib section (No. 2316.20)	20 ft
Width	8´
Weight*	2,100 lbs

Luffing jib section (No. 2316.20)	10 ft
Width	8´
Weight*	1,325 lbs

L - boom jib section (No. 2316.20)	39.4 inch
Width	8´
Weight*	1,415 lbs

Luffing jib foot with A-frames (No. 2316.22)	
Width	8´9´´
Weight*	17,800 lbs

L - boom section tapered (No. 2821/2316.24)	40 ft
Width	9´9´´
Weight*	5,955 lbs

Fixed jib (No. 0906.21)

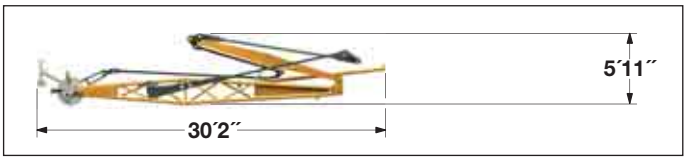

Fixed jib (No. 0906.21)	
Width	59.1 inch
Weight*	5,300 lbs

Fixed jib (No. 1507.20)

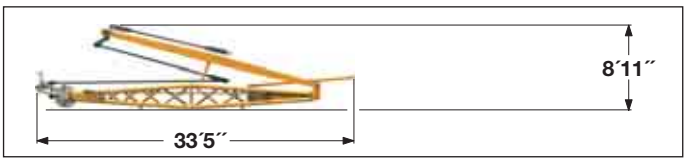

Fixed jib (No. 1507.20)	
Width	8´1´´
Weight*	7,275 lbs

*) including carbon fibre pendants

Transport dimensions and weights

Counterweights

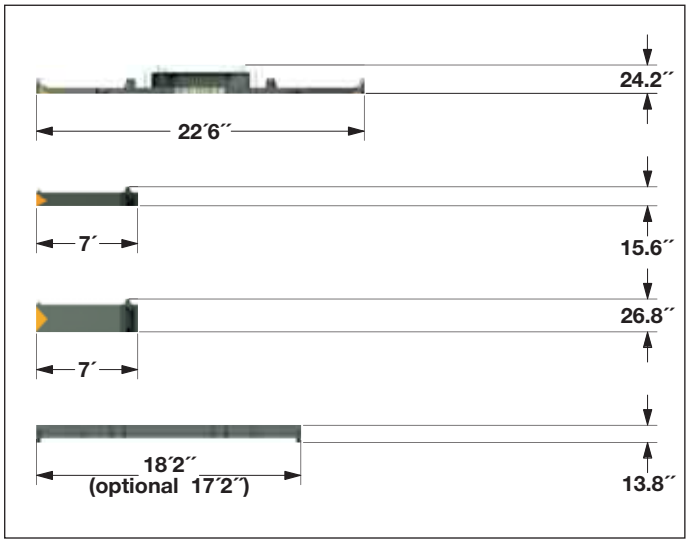

Counterweight	1x
Width	6´11´´
Weight	31,970 lbs

Counterweight	6x
Width	6´11´´
Weight	11,025 lbs

Counterweight	8x
Width	6´11´´
Weight	22,050 lbs

Carbody counterweight	4x	
	Optional	Standard
Width	59.1 inch	47.2 inch
Weight	29,545 lbs	31,420 lbs

Hooks

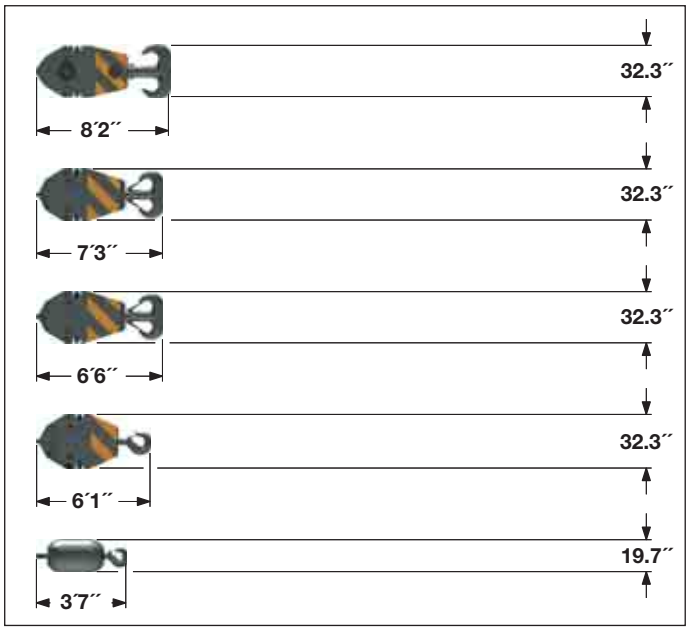

661,400 lbs hook block – 11 sheaves		
Width	34.6	48.4 inch
Weight	7,055	12,125 lbs

330,700 lbs hook block – 5 sheaves			
Width	19.7	26.0	32.3 inch
Weight	3,530	6,180	8,820 lbs

220,500 lbs hook block – 3 sheaves			
Width	13.4	18.9	24.4 inch
Weight	2,425	4,520	6,620 lbs

110,230 lbs hook block – 1 sheave			
Width	11.0	16.1	21.3 inch
Weight	1,765	3,530	5,295 lbs

35,300 lbs single hook	
Width	19.7 inch
Weight	1,985 lbs

Dimensions (optional)

Basic machine with telescopic undercarriage

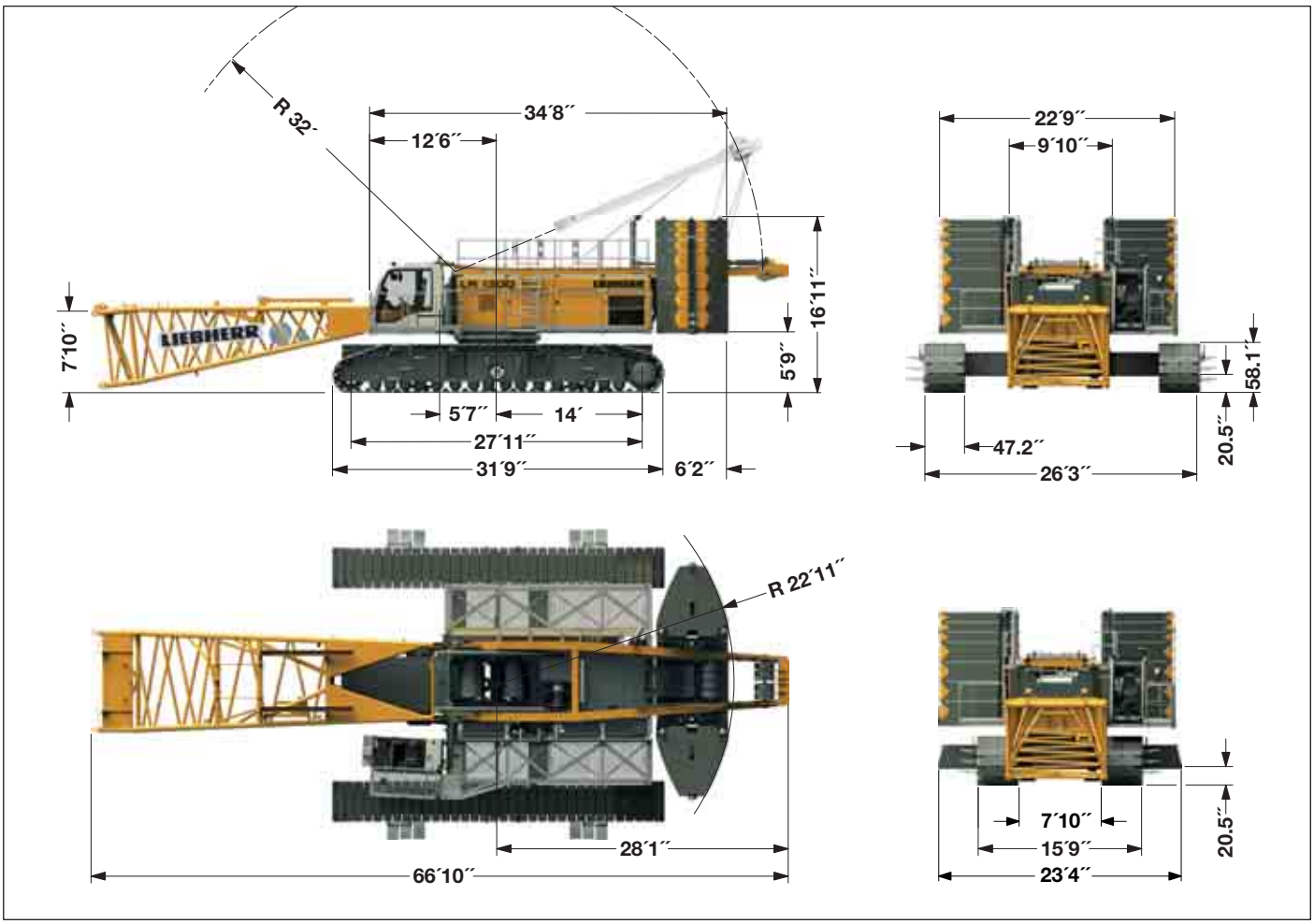

Transport dimensions and weights (optional)

Basic machine

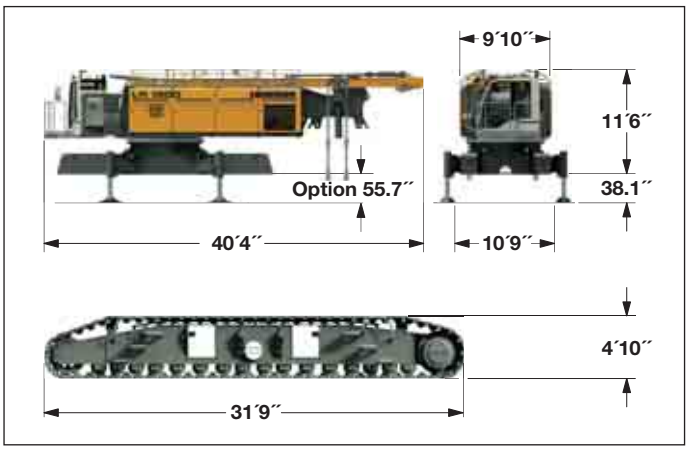

Basic machine	
with A-frame, 2x 33,725 lbf crane winches, without boom foot, basic counterweight and crawlers	
Width	9´10´´
Weight without hoist rope	102,515 lbs
Weight of hoist rope	2.75 lbs/ft

Crawler	2x
Track pads	47.2 inch
Width	47.2 inch
Weight	50,710 lbs

Carbody counterweights (optional)

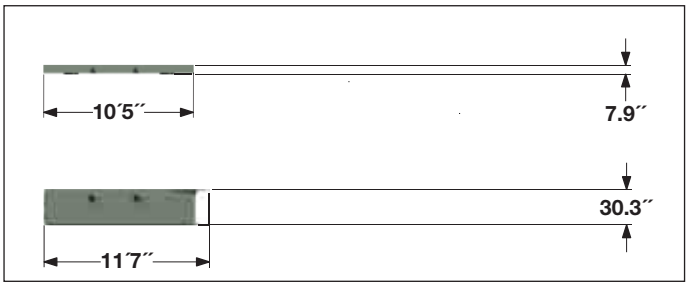

Carbody counterweight	2x
Width	5´11´´
Weight	13,670 lbs

Carbody counterweight	2x
Width	5´11´´
Weight	44,315 lbs

Boom combinations

Main boom No.2821.xx — 302 ft	Max. combination —— 295 ft	Max. combination —— 298 ft	Max. combination —— 555 ft
	Main boom No. 2821.xx – 272 ft	Main boom No. 2821.xx – 272 ft	Main boom No. 2821.xx – 184 ft
	Fixed jib No. 0906.21 — 23 ft	Fixed jib No. 1507.21 — 26 ft	Luffing jib No. 2316.xx – 371 ft
			Max. combination —— 348 ft
			Main boom No. 2821.xx – 223 ft
			Luffing jib No. 2316.xx – 125 ft

Technical description

Engine

Power rating according to ISO 9249, 390 kW (523 hp) at 1900 rpm
Engine type — Liebherr D 856 A7 SCR
Fuel tank — 238 gal capacity with continuous level indicator and reserve warning
Engine complies with NRMM exhaust certification EPA/CARB Tier 4i or 97/68 EC Stage IIIB.

Hydraulic system

An axial displacement pump supplies the open loop hydraulic system for boom luffing, jib luffing and travel. The main hoist winches and swing are operated in a closed loop system. All functions can be operated simultaneously. To minimize peak pressure an automatic working pressure cut–off has been installed. All filters are electronically monitored.
The use of synthetic environmentally friendly (biodegradable) oils is possible.
Working pressure — max. 5076 PSI
Oil tank capacity — 238 gal

Luffing jib winch

Line pull — max. 23,605 lbf
Rope diameter — 20 mm
Jib luffing — 69 sec. from 15° to 78°

Boom winch

Line pull — max. 48,785 lbf
Rope diameter — 24 mm
Boom up — 127 sec. from 15° to 86°

Crawlers

Propulsion through axial piston motor, hydraulically released spring loaded multi–disc brake, crawler tracks, hydraulic chain tensioning device.
Track pads — 47.2 inch (optional 59 inch)
Drive speed — 0 – 0.8 mph

Swing

Consists of rollerbearing with external teeth, swing drive with fixed axial piston hydraulic motor, spring loaded and hydraulically released multi–disc holding brake, planetary gearbox and pinion.
Both swing modes are possible – speed control or free swing.
A multi–disc holding brake acts automatically at zero swing motion.
Swing speed from 0 – 1.8 rpm continuously variable.

Main winches

Line pull (1st layer) — max. 48,335 lbf
Line pull (7th layer) — 33,725 lbf
Rope diameter — 28 mm
Drum diameter — 28.7 inch
Rope speed — 0 – 453 ft/min
Rope capacity in 7 layers — 1,870 ft
The winches are outstanding in their compact design and easy assembly.
Propulsion is via a planetary gearbox in an oil bath.
Load support by the hydraulic system; additional safety factor provided by a spring loaded, multi–disc holding brake.
The main winches use pressure controlled, variable flow hydraulic motors.
This system features sensors that automatically adjust oil flow to provide max. winch speed depending on load.

Option – winch with free-fall system:
Line pull (1st layer in crane operation) — max. 42,715 lbf
Line pull (7th layer in crane operation) — 29,225 lbf
Line pull (1st layer in free-fall operation) — 38,220 lbf
Line pull (7th layer in free-fall operation) — 26,530 lbf
Rope diameter — 28 mm
Drum diameter — 28.3 inch
Rope speed — 0 – 351 ft/min
Rope capacity in 7 layers — 1,870 ft
The winches are outstanding in their compact design and easy assembly.
Clutch and braking functions on the free-fall system are provided by a compact designed, low wear and maintenance-free multi–disc brake.

Control

The control system – developed and manufactured by Liebherr – is designed to withstand extreme environmental conditions such as temperature, vibration and electromagnetic interference and to meet all requirements that are needed in heavy duty crane operation.
Complete machine operating data are shown on a high resolution display. Standard operational information is displayed by means of graphical symbols, fault indications are displayed in plain text (more than 15 languages available).
The cranes are equipped with proportional control for all main movements, which can be carried out simultaneously.
The crane is operated with 2 multi–directional joysticks, the right for winch I and boom, the left for winch II and swing control.
Option:
Bi–directional double T–levers for simultaneous boom and luffing jib operation.
The crawlers are activated by the two foot pedals. Additionally, hand levers can be attached to the pedals.
Remote control for assembly of counterweight and boom hinge pins.

Noise emission

Noise emissions correspond with 2000/14/EC directive on noise emission by equipment used outdoors.

Self-assembly system

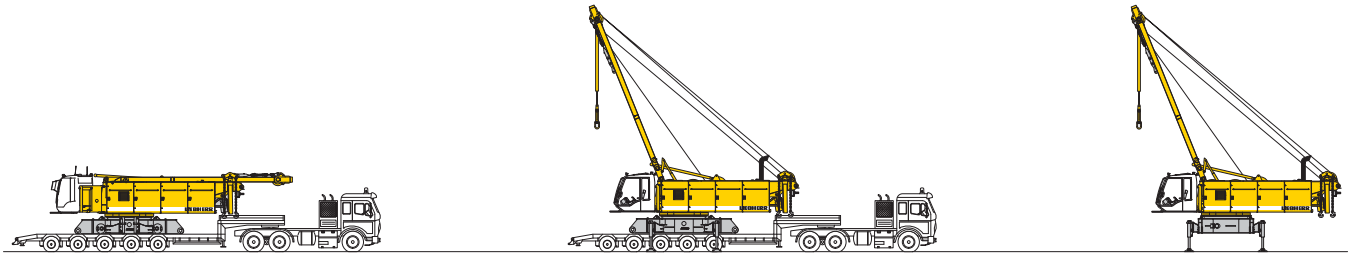

Unloading of basic machine

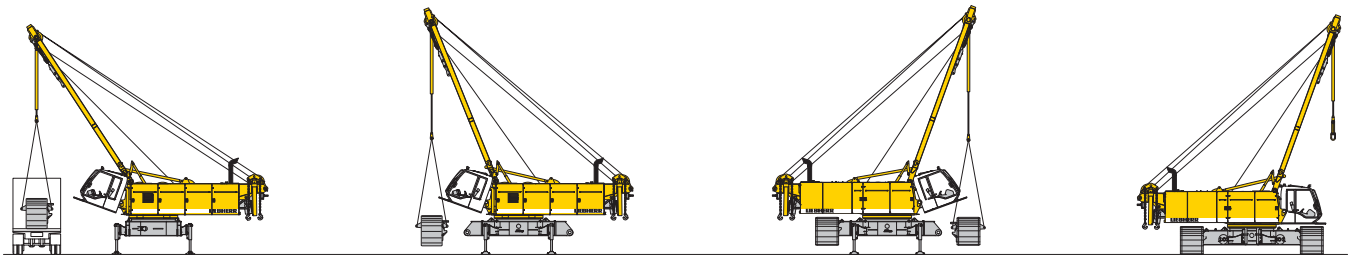

Unloading and assembly of crawlers

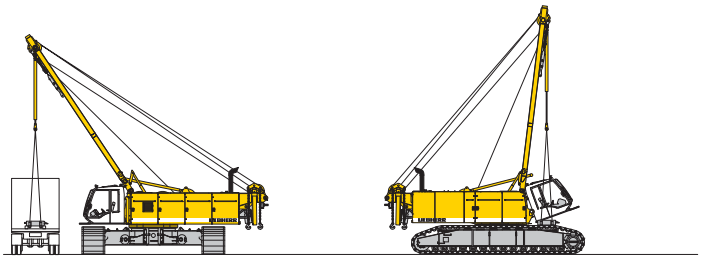

Unloading and assembly of carbody counterweight

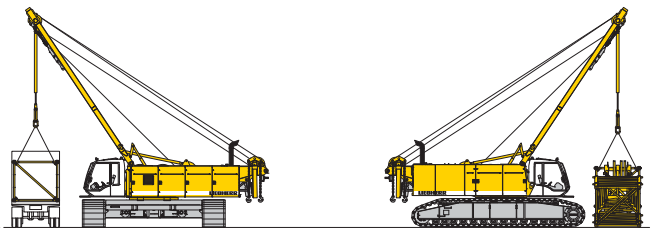

Unloading and assembly of boom

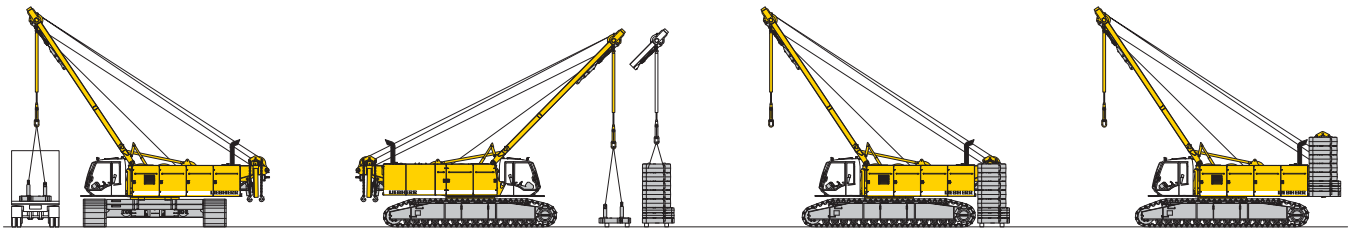

Unloading and assembly of counterweight

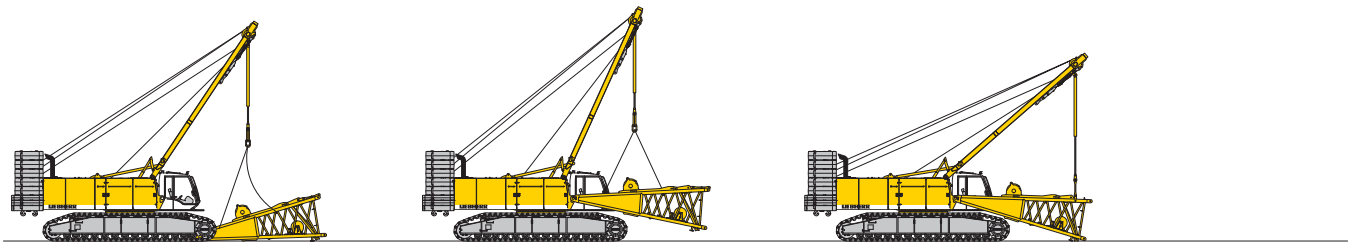

Unloading and assembly of boom foot

Erecting of main boom to working position

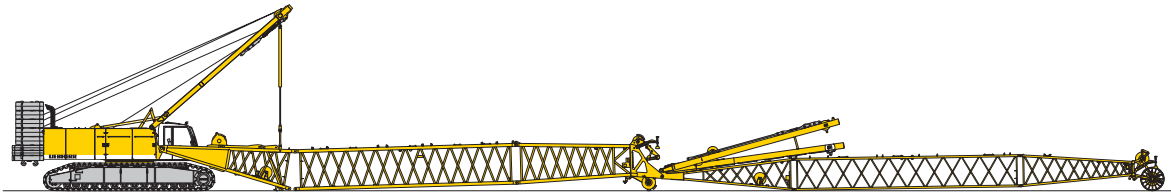

Assembly of boom

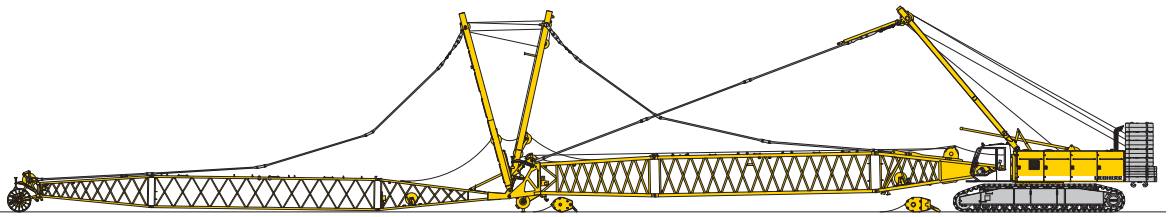

Reeving of hoist and luffing jib ropes

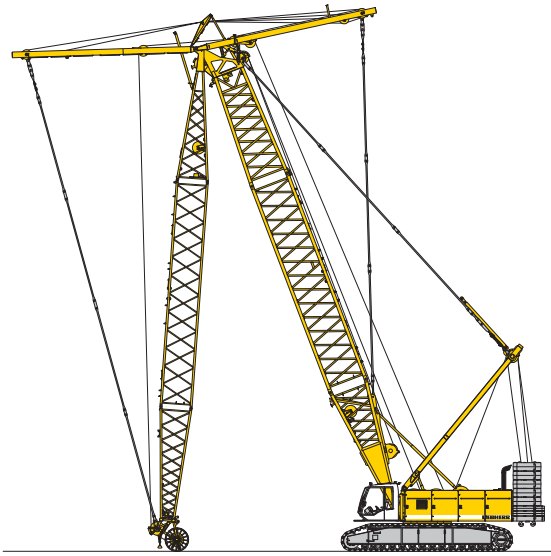

Erecting of main boom and luffing jib

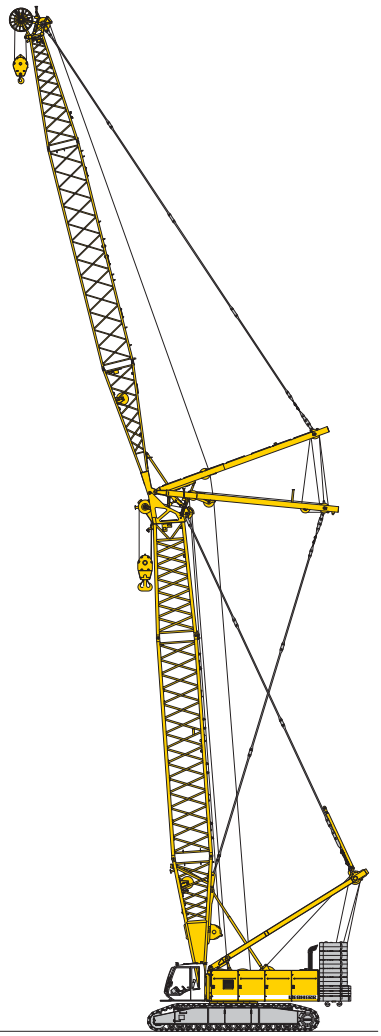

Working position

Main boom (No. 2821.xx) 86° – 15°

273,400 lbs counterweight and 125,700 lbs carbody counterweight

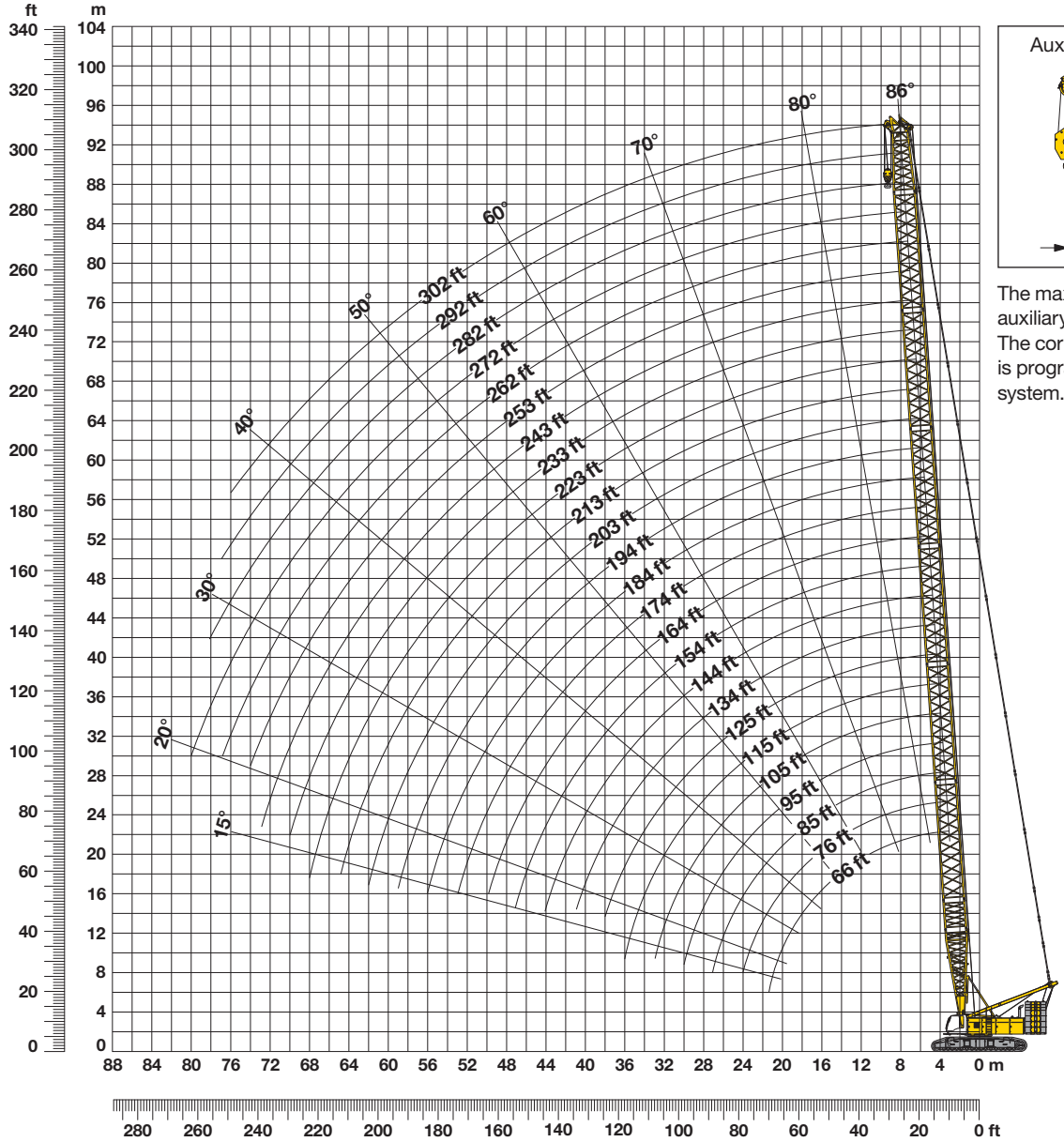

Auxiliary jib 79,400 lbs

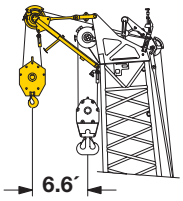

The maximum capacity of the auxiliary jib is 79,400 lbs. The corresponding load chart is programmed in the LMI system.

Main boom configuration (No. 2821.xx)

Configuration for boom lengths between 66 ft and 302 ft

	Length*	Amount of boom extensions																								
Boom foot	33 ft	1	1	1	1	1	1	1	1	1	1	1	1	1	1	1	1	1	1	1	1	1	1	1	1	1
Boom insert	10 ft	1		1		1		1		1		1		1		1		1		1		1		1		1
Boom insert	20 ft		1	1			1	1			1	1			1	1			1	1			1	1		
Boom insert	40 ft				1	1	1	1	2	2	2	2	3	3	3	3	4	4	4	4	5	5	5	5	6	6
Boom head	23 ft	1	1	1	1	1	1	1	1	1	1	1	1	1	1	1	1	1	1	1	1	1	1	1	1	1
Boom length (ft)		66	76	85	95	105	115	125	134	144	154	164	174	184	194	203	213	223	233	243	253	262	272	282	292	302

*Actual lengths of boom sections are metric (e.g. 3 m, 6 m, 7 m, 10 m, 12 m). The figures shown above are approximate conversions to feet.

Lift chart for main boom (No. 2821.xx)

229,300 lbs counterweight and 125,700 lbs carbody counterweight

	Boom length in (ft)														
Radius	66	75	85	105	125	144	164	184	203	223	243	262	272	282	Radius
(ft)	lbs	lbs	lbs	lbs	lbs	lbs	lbs	lbs	lbs	lbs	lbs	lbs	lbs	lbs	(ft)
15	662,4	662,4													15
20	578,7	578,3	577,1	574,4	570,0	526,0									20
25	459,0	458,7	457,5	456,4	454,5	453,0	447,4	430,7	369,5						25
30	379,1	378,8	377,7	376,7	374,7	373,3	371,2	369,6	344,9	326,4	291,8	249,7	242,4	227,7	30
40	274,0	274,4	274,2	274,3	273,8	273,4	271,4	269,7	265,7	259,2	252,7	239,8	235,6	222,8	40
50	198,5	198,8	198,6	198,5	197,8	197,3	196,4	195,7	194,7	193,9	190,0	185,4	183,1	180,7	50
60	154,0	154,4	154,1	154,1	153,3	152,6	151,6	150,8	149,7	148,8	147,7	146,4	144,5	142,5	60
70		125,0	124,8	124,8	123,9	123,2	122,1	121,2	120,1	119,1	117,9	116,9	116,3	115,7	70
80			103,9	104,0	103,1	102,4	101,3	100,3	99,1	98,1	96,9	95,8	95,2	94,5	80
90				88,4	87,6	86,9	85,7	84,8	83,5	82,4	81,2	80,0	79,4	78,8	90
105				71,1	70,4	69,8	68,6	67,6	66,4	65,2	63,9	62,8	62,1	61,4	105
125					54,4	53,9	52,8	51,8	50,5	49,4	48,0	46,8	46,2	45,4	125
145						42,5	41,6	40,6	39,3	38,2	36,8	35,6	35,0	34,2	145
165							33,2	32,5	31,2	30,1	28,7	27,5	26,9	26,1	165
185								25,9	24,7	23,7	22,3	21,1	20,5	19,7	185
200									20,7	19,7	18,4	17,2	16,5	15,8	200
220										15,2	13,9	12,8	12,1	11,4	220
240											10,2	9,1	8,5	7,7	240
260												5,9	5,3	4,6	260
270													3,9	3,2	270
275														2,4	275

TLT 10539958 - M107135 Offiziell

Lift chart for main boom (No. 2821.xx)

273,400 lbs counterweight and 125,700 lbs carbody counterweight

	Boom length in (ft)															
Radius	66	75	85	105	125	144	164	184	203	223	243	262	272	282	292	302	Radius
(ft)	lbs	lbs	lbs	lbs	lbs	lbs	lbs	lbs	lbs	lbs	lbs	lbs	lbs	lbs	lbs	lbs	(ft)
20,9							480,4										20,9
25						453,8	447,4	430,7	369,5								25
30				398,1	389,6	384,3	379,7	370,3	344,9	326,4	291,8	249,7	242,4	227,7	214,8		30
35			345,3	341,5	338,1	332,7	326,1	322,4	314,7	300,7	278,3	245,7	240,7	227,0	214,8	198,8	35
40	300,7	300,5	299,4	298,4	295,0	291,9	289,2	281,4	274,6	271,7	267,1	239,8	235,6	222,8	210,8	195,5	40
60	174,7	175,1	174,9	174,8	174,0	173,3	172,3	171,5	170,4	169,5	168,4	167,4	166,2	163,9	161,6	155,6	60
70		142,2	142,0	141,9	141,1	140,4	139,3	138,4	137,3	136,3	135,1	134,1	133,5	132,9	132,4	130,9	70
80			118,6	118,6	117,8	117,1	115,9	115,0	113,8	112,8	111,5	110,4	109,8	109,2	108,7	108,1	80
90				101,2	100,4	99,7	98,5	97,5	96,3	95,2	94,0	92,8	92,2	91,6	91,0	90,4	90
105				81,8	81,2	80,5	79,3	78,4	77,1	76,0	74,7	73,5	72,9	72,2	71,6	71,0	105
125					63,2	62,7	61,6	60,6	59,3	58,2	56,9	55,6	55,0	54,3	53,7	53,0	125
145						50,0	49,1	48,1	46,9	45,7	44,4	43,1	42,5	41,7	41,2	40,5	145
165							39,6	38,8	37,6	36,5	35,1	33,9	33,4	32,7	31,9	31,2	165
185								31,6	30,5	29,4	28,1	26,9	26,2	25,5	24,9	24,2	185
200									26,0	25,0	23,7	22,5	21,8	21,1	20,5	19,8	200
220										20,0	18,8	17,6	16,9	16,2	15,6	14,9	220
240											14,6	13,5	12,9	12,1	11,6	10,8	240
260												9,9	9,4	8,4	7,7	6,6	260
270													7,6	6,5	5,8	4,7	270
280														4,6	4,0	2,9	280
285															3,1		285

TLT 10539958 - M107135 Offiziell

Above lift chart is for reference only.
For actual lift duty and complete chart with all available configurations please refer to lift chart in operator's cab or manual.

Working range – luffing jib (No. 2316.xx) 78° – 15°

Main boom 88° – 45°

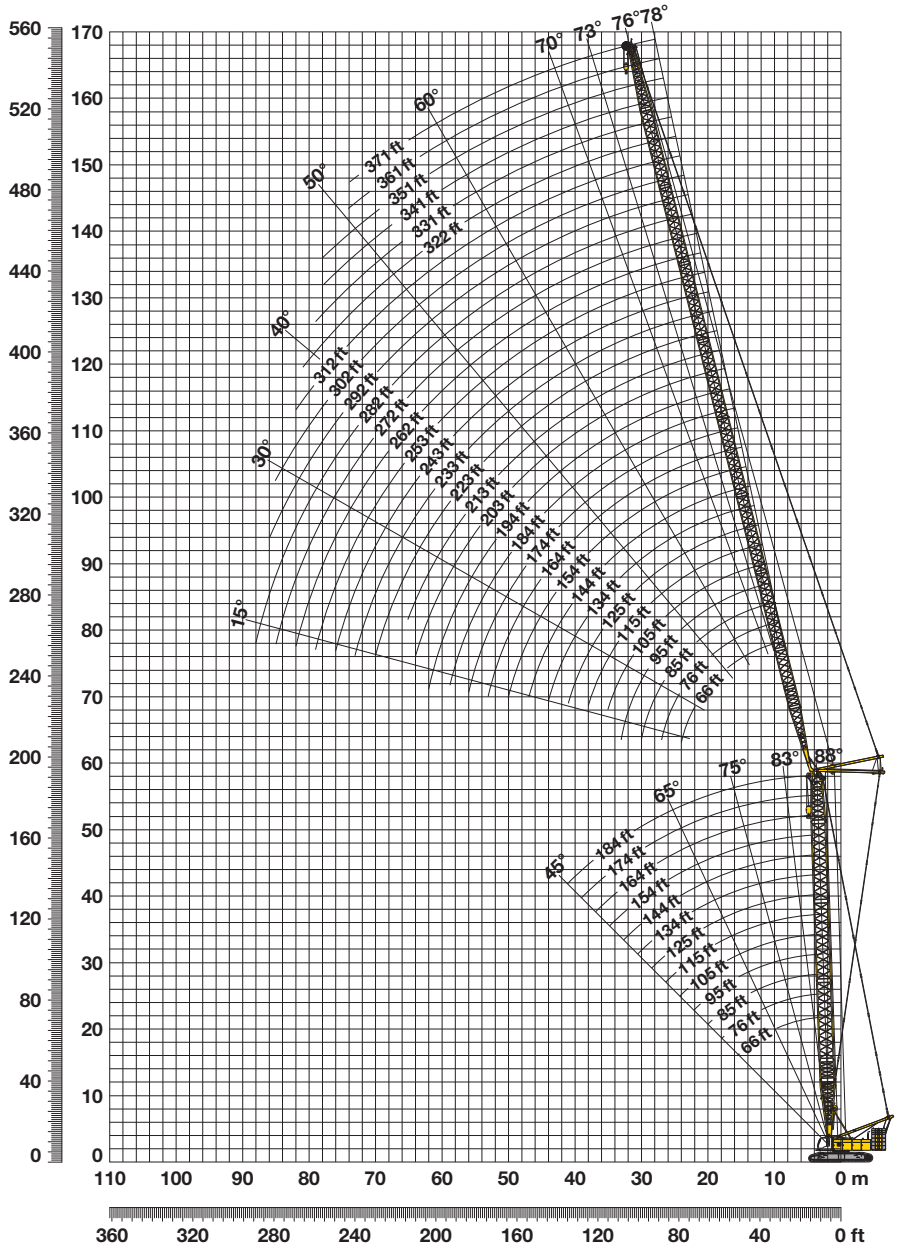

Boom configuration for main boom lengths (66 ft – 223 ft) – see table on page 12

Jib configuration for jib lengths (66 ft – 371 ft)

	Length*	Amount of luffing jib extensions																															
Luffing jib foot	33 ft	1	1	1	1	1	1	1	1	1	1	1	1	1	1	1	1	1	1	1	1	1	1	1	1	1	1	1	1	1	1	1	1
Luffing jib insert	10 ft		1		1		1		1		1		1		1		1		1		1		1		1		1		1		1		1
Luffing jib insert	20 ft			1	1			1	1			1	1			1	1			1	1			1	1			1	1			1	1
Luffing jib insert	40 ft					1	1	1	1	2	2	2	2	3	3	3	3	4	4	4	4	5	5	5	5	6	6	6	6	7	7	7	7
Luffing jib head	33 ft	1	1	1	1	1	1	1	1	1	1	1	1	1	1	1	1	1	1	1	1	1	1	1	1	1	1	1	1	1	1	1	1
Luffing jib length (ft)		66	75	85	95	105	115	125	134	144	154	164	174	184	194	203	213	223	233	243	253	262	272	282	292	302	312	322	331	341	351	361	371

*Actual lengths of boom sections are metric (e.g. 3 m, 6 m, 10 m, 12 m). The figures shown above are approximate conversions to feet.

Lift chart – luffing jib (No. 2316.xx)

Main boom angle 88°

Main boom 66 ft

Radius	Jib length in (ft) 66	135	174	213	253	292	331	361
(ft)	lbs	lbs	lbs	lbs	lbs	lbs	lbs	lbs
40,6		207,1						
50		168,4	154,6					
60	139,4	131,1	128,3	110,3				
70	108,3	106,3	103,9	100,4	80,6			
75		97,1	97,0	95,3	79,3	55,1		
85		84,6	81,1	79,2	75,5	53,9	39,0	
90		78,8	75,0	73,7	69,5	52,8	38,5	29,6
120		54,9	53,2	50,3	48,1	46,3	33,9	25,9
140		44,0	43,5	40,0	38,6	36,4	30,6	24,0
180			30,3	29,2	27,8	25,4	23,2	19,9
215				22,3	21,0	18,7	16,1	14,4
255					14,5	13,5	11,1	8,6
290						9,0	7,8	2,8
295							7,2	2,0
330							3,6	

Main boom 105 ft

Radius	Jib length in (ft) 66	135	184	213	253	292	331	371
(ft)	lbs	lbs	lbs	lbs	lbs	lbs	lbs	lbs
40	258,0							
50	231,5	194,6						
55	210,8	185,3	134,6					
60	185,0	175,2	132,9	102,9				
70	138,9	151,0	128,5	100,1	75,6			
75	113,5	140,2	125,7	98,5	74,7	50,4		
85		121,4	116,9	94,6	72,5	49,8	37,1	
95		106,0	102,4	90,0	69,9	48,5	36,3	26,2
140		54,5	63,7	60,8	59,2	42,7	30,4	21,8
190			34,1	39,4	39,3	35,6	25,9	18,3
215				28,0	31,5	30,7	24,3	17,0
255					19,6	22,4	19,2	14,9
295						12,0	14,1	5,1
310							11,1	2,1
330							7,0	

Main boom 134 ft

Radius	Jib length in (ft) 66	135	174	213	253	292	331	371
(ft)	lbs	lbs	lbs	lbs	lbs	lbs	lbs	lbs
28,7	258,0							
45	245,7	185,5						
55	207,6	178,3	133,9					
60	186,8	170,0	131,6	96,4				
70	147,5	151,3	126,3	94,5	70,4			
80		130,9	121,2	91,2	69,1	50,7		
85		121,5	114,6	89,3	68,3	50,2	35,9	
95		106,0	104,1	86,1	66,2	48,4	35,4	25,2
140		57,6	64,8	61,6	58,0	42,0	29,8	21,3
180			39,2	44,1	43,8	37,0	26,6	18,4
220				27,6	31,3	30,2	23,9	16,4
255					20,8	22,7	19,6	15,1
295						13,1	14,9	5,3
310							11,9	2,4
330							7,9	

Main boom 184 ft

Radius	Jib length in (ft) 66	135	174	213	253	292	331	371
(ft)	lbs	lbs	lbs	lbs	lbs	lbs	lbs	lbs
30,4	255,6							
45	227,6	147,6						
55	194,1	143,7	108,8					
65	166,1	133,9	105,3	81,2				
70	154,7	129,2	103,1	80,3	61,0			
75	132,8	124,6	101,0	79,1	61,0			
90		110,3	92,9	74,6	58,6	45,1	32,9	
95		105,3	90,1	73,5	57,5	44,4	32,7	23,4
145		54,5	62,1	57,2	48,7	38,5	27,5	19,6
180			41,0	44,7	42,6	34,8	24,9	17,6
220				28,6	31,8	29,6	22,5	15,8
260					19,0	22,4	18,7	14,0
295						13,4	15,7	5,7
310							12,7	2,8
335							7,6	

Main boom 194 ft

Radius	Jib length in (ft) 66	135	174	213	253	292	331	341
(ft)	lbs	lbs	lbs	lbs	lbs	lbs	lbs	lbs
30,8	240,6							
50	203,7	139,9						
55	187,7	136,2	104,5					
65	162,3	127,7	101,2	78,5				
70	151,4	123,5	99,0	77,8	59,3			
80		115,1	94,8	75,3	58,6	44,9		
90		106,1	88,9	72,1	57,0	44,5	32,5	29,6
120		79,7	74,0	63,5	51,4	40,8	29,7	27,2
145		55,5	61,5	55,7	47,2	37,8	27,4	25,1
180			41,7	44,5	40,9	33,9	24,8	22,6
220				29,1	31,9	29,0	22,4	20,4
260					19,1	22,7	18,8	17,6
295						13,7	15,4	14,8
335							7,7	8,4
345								6,4

Main boom 213 ft

Radius	Jib length in (ft) 66	135	174
(ft)	lbs	lbs	lbs
31,5	214,0		
50	184,6	125,9	
55	173,5	122,5	95,9
60	165,4	118,7	95,0
70	145,8	111,6	91,3
80	33,4	104,0	86,9
90		96,8	81,9
100		90,0	77,8
110		83,7	73,2
120		76,9	68,6
140		61,0	60,9
145		56,1	58,9
160			53,6
180			41,9
185			33,4

Main boom 223 ft

Radius	Jib length in (ft) 125
(ft)	lbs
44,1	128,9
50	126,8
60	119,1
70	111,0
80	104,0
90	95,4
95	92,0
100	89,1
105	85,6
110	82,3
115	79,3
120	76,8
125	72,3
130	67,0
135	61,6

TLT 10539958 - M107135 Offiziell

Capacities in 1000 lbs with luffing jib (No. 2316.xx) 273,400 lbs counterweight + 125,700 lbs carbody counterweight. Above lift chart is for reference only. For actual lift duty and complete chart with all available configurations please refer to lift chart in operator's cab or manual.

Lift chart – luffing jib (No. 2316.xx)

Main boom angle 83°

Main boom 66 ft

Radius	Jib length in (ft) 66	135	174	213	253	292	331	361
(ft)	lbs	lbs	lbs	lbs	lbs	lbs	lbs	lbs
37,7	258,0							
60	165,7	162,0						
70	129,7	128,6	120,9					
80	98,6	103,3	103,2					
85		94,8	96,0	94,6				
95		80,6	79,9	80,0	72,4			
105		70,9	69,2	68,3	67,4	49,6		
120		59,4	56,6	56,5	55,9	48,0	33,6	
125		56,7	54,0	53,2	51,9	47,1	33,3	24,6
145		46,2	44,4	41,9	40,8	38,8	31,0	23,2
185			32,1	30,0	29,0	26,2	25,1	20,2
220				23,6	21,8	19,5	17,2	14,9
260					15,9	14,1	11,8	8,9
300						9,8	7,9	
335							4,8	

Main boom 105 ft

Radius	Jib length in (ft) 66	135	174	213	253	292	331	371
(ft)	lbs	lbs	lbs	lbs	lbs	lbs	lbs	lbs
42,5	258,0							
65	166,5	164,2						
75	139,3	137,1	134,7					
85	115,2	117,4	116,0					
90		109,4	108,0	96,1				
100		96,2	94,8	91,9	70,4			
110		85,6	84,2	82,8	68,8	47,5		
125		73,2	71,9	70,4	65,6	46,1	32,4	
135		66,6	65,3	63,9	62,4	44,8	31,5	22,0
150		56,1	57,2	55,8	54,3	42,7	30,0	21,0
190			38,3	40,9	39,5	37,3	26,5	18,3
225				29,1	31,0	29,6	24,1	16,6
265					20,5	22,7	19,5	13,6
305						12,9	14,9	4,2
340							7,8	

Main boom 134 ft

Radius	Jib length in (ft) 66	135	174	213	253	292	331	371
(ft)	lbs	lbs	lbs	lbs	lbs	lbs	lbs	lbs
46,1	234,2							
70	150,3	147,7						
80	127,3	125,0	123,5					
85	118,1	116,0	114,5					
90		108,1	106,6	92,5				
105		89,5	88,1	86,5	66,7			
115		80,1	78,7	77,1	65,3	46,3		
125		72,3	70,9	69,4	63,5	45,5	31,7	
140		62,9	61,6	60,1	58,5	43,5	30,8	21,3
155		55,3	54,2	52,7	51,2	41,7	29,4	20,3
190			41,6	40,3	38,8	37,2	26,5	18,0
230				29,5	29,5	28,0	23,9	16,1
270					20,9	21,5	19,6	13,1
305						14,7	15,8	5,0
345							8,1	

Main boom 184 ft

Radius	Jib length in (ft) 66	135	174	213	253	292	331	371
(ft)	lbs	lbs	lbs	lbs	lbs	lbs	lbs	lbs
52,1	195,3							
75	135,0	128,3						
85	115,7	113,2	104,0					
95	100,8	98,7	97,0					
100		92,7	91,1	81,0				
110		82,5	80,9	77,6	60,1			
120		74,2	72,6	71,0	59,1	42,7		
130		67,2	65,7	64,1	57,4	42,3	29,6	
160		51,8	50,6	49,0	47,4	39,1	27,6	19,4
200			33,4	36,3	34,8	33,1	24,8	17,0
235				28,9	27,5	26,0	22,7	15,5
275					20,9	19,9	18,1	13,2
310						14,6	14,4	5,3
325							12,9	2,5
350							8,5	

Main boom 194 ft

Radius	Jib length in (ft) 66	135	174	213	253	292	331
(ft)	lbs	lbs	lbs	lbs	lbs	lbs	lbs
53,3	186,2						
75	134,3	123,8					
85	115,1	112,5	100,6				
95	100,3	98,1	96,2				
100		92,1	90,5	78,5			
110		82,0	80,4	75,9	58,6		
120		73,7	72,1	70,5	57,8	42,2	
135		63,8	62,3	60,7	55,6	41,4	29,3
160		51,5	50,2	48,7	47,1	38,7	27,5
200			37,4	36,1	34,5	32,4	24,8
235				28,6	27,2	25,7	22,7
275					21,1	19,7	17,6
315						14,0	13,7
340							10,3
360							

Main boom 213 ft

Radius	Jib length in (ft) 66	135	174
(ft)	lbs	lbs	lbs
55,7	170,9		
80	122,7	114,5	
90	106,2	102,7	93,0
95	99,3	96,8	91,1
100		90,9	87,0
110		80,9	79,3
120		72,7	71,1
130		65,9	64,4
140		60,1	58,6
150		55,2	53,7
160		50,8	49,5
165		48,8	47,6
180			42,5
190			39,5
200			36,9

Main boom 223 ft

Radius	Jib length in (ft) 125
(ft)	lbs
74,2	116,7
75	116,5
80	113,9
90	101,6
100	90,9
110	80,9
115	76,6
120	72,8
125	69,2
130	66,0
135	63,0
140	60,2
145	57,6
150	55,2
155	53,0

TLT 10539958 - M107135 Offiziell

Capacities in 1000 lbs with luffing jib (No. 2316.xx) 273,400 lbs counterweight + 125,700 lbs carbody counterweight. Above lift chart is for reference only. For actual lift duty and complete chart with all available configurations please refer to lift chart in operator's cab or manual.

Lift chart – luffing jib (No. 2316.xx)

Main boom angle 75°

Main boom 66 ft

Radius	Jib length in (ft) 66	135	174	213	253	292	331	361
(ft)	lbs	lbs	lbs	lbs	lbs	lbs	lbs	lbs
60	181,2							
85	117,3	115,1						
105		85,0	84,2					
120		68,8	68,1	65,1				
135		58,9	55,7	55,7	50,2			
155		47,1	45,7	43,8	42,7	38,6		
170			40,0	37,8	36,3	34,5	28,3	
180			36,7	34,6	32,4	32,7	27,6	20,6
195			33,0	31,0	30,0	28,3	25,0	20,1
200				30,7	28,8	26,8	24,3	19,7
230				24,1	22,4	20,1	17,9	15,8
270					16,2	14,2	11,9	10,0
305						10,6	8,3	6,2
345							5,4	3,6
370								2,2

Main boom 105 ft

Radius	Jib length in (ft) 66	135	174	213	253	292	331	371
(ft)	lbs	lbs	lbs	lbs	lbs	lbs	lbs	lbs
70	144,8							
95	99,4	96,8						
100	93,3	90,9						
115		76,6	75,0					
130		65,9	64,3	62,7				
145		57,6	56,1	54,4	52,8			
165		48,9	47,6	46,0	44,3	41,5		
180			42,5	40,9	39,3	37,6	27,7	
195			38,2	36,7	35,1	33,5	26,9	18,3
205			33,4	34,2	32,7	31,1	26,1	18,1
240				27,3	25,8	24,3	22,6	16,4
280					20,0	18,6	17,0	14,5
315						14,8	13,3	5,2
330							11,9	2,1
355							9,1	

Main boom 134 ft

Radius	Jib length in (ft) 66	135	174	213	253	292	331	371
(ft)	lbs	lbs	lbs	lbs	lbs	lbs	lbs	lbs
75	129,1							
105	85,5	82,8						
120		70,3	68,5					
140		58,1	56,4	54,7				
155		51,1	49,6	47,9	46,1			
170		45,4	44,0	42,3	40,6	38,9		
175		33,4	42,4	40,7	39,0	37,3		
190			38,0	36,4	34,7	33,1	27,0	
205			34,2	32,8	31,2	29,5	26,3	17,5
210			33,1	31,7	30,1	28,4	25,9	17,5
250				24,4	23,0	21,3	19,6	15,7
285					18,3	16,8	15,2	12,7
325						12,8	11,3	4,7
335							10,5	2,6
365							8,2	

Main boom 184 ft

Radius	Jib length in (ft) 66	135	174	213	253	292	331	371
(ft)	lbs	lbs	lbs	lbs	lbs	lbs	lbs	lbs
90	97,0							
115	72,0	66,4						
120	68,2	65,3						
135		56,4	54,5					
150		49,4	47,6	45,7				
165		43,8	42,1	40,2	37,9			
185		37,6	36,1	34,4	32,5	29,3		
200			32,5	30,9	29,1	26,1	22,9	
215			29,4	27,8	26,0	23,3	20,2	16,5
225			27,5	26,0	24,3	21,7	18,7	15,6
260				20,7	19,1	17,0	14,1	11,2
300					14,6	13,1	10,3	7,6
340						9,7	7,4	3,0
345							7,0	2,3
375							4,6	

Main boom 194 ft

Radius	Jib length in (ft) 66	135	174	213	253	292	331
(ft)	lbs	lbs	lbs	lbs	lbs	lbs	lbs
90	95,6						
120	67,3	64,1					
135		55,4	53,5				
155		46,6	44,8	42,9			
170		41,4	39,6	37,8	35,1		
185		37,0	35,4	33,6	31,3	27,9	
190		33,4	34,1	32,4	30,2	26,9	
205			30,8	29,1	27,1	24,0	20,8
220			27,8	26,2	24,5	21,4	18,4
225			26,9	25,4	23,6	20,7	17,6
265				19,5	17,9	15,6	12,7
300					14,2	12,4	9,6
340						9,0	6,8
380							3,7
390							

Main boom 213 ft

Radius	Jib length in (ft) 66	135	174
(ft)	lbs	lbs	lbs
95	86,7		
125	62,0	58,7	
140		51,0	49,0
150		46,7	44,8
160		43,0	41,2
170		39,8	38,0
180		36,9	35,2
190		34,3	32,7
195		33,1	31,6
200			30,5
210			28,5
215			27,5
220			26,6
225			25,7
230			24,9

Main boom 223 ft

Radius	Jib length in (ft) 125
(ft)	lbs
120,9	60,6
125	58,2
130	55,4
135	52,9
140	50,5
145	48,4
150	46,3
155	44,5
160	42,7
165	41,0
170	39,5
175	38,0
180	36,6
185	35,3

TLT 10539958 - M107135 Offiziell

Capacities in 1000 lbs with luffing jib (No. 2316.xx) 273,400 lbs counterweight + 125,700 lbs carbody counterweight. Above lift chart is for reference only. For actual lift duty and complete chart with all available configurations please refer to lift chart in operator's cab or manual.

Lift chart – luffing jib (No. 2316.xx)

Main boom angle 65°

Main boom 66 ft

Radius	Jib length in (ft) 66	135	174	213	253	292	331	361
(ft)	lbs	lbs	lbs	lbs	lbs	lbs	lbs	lbs
80	122,3							
100	93,0							
120		70,6						
140		53,6	52,9					
165		40,6	39,0	38,4				
185			32,6	32,4	29,9			
205			28,2	26,2	24,6			
210				24,9	23,4	21,3		
230				21,3	18,9	17,0	14,3	
240				19,5	17,1	15,3	13,5	
245					16,3	14,4	12,7	9,4
280					12,3	9,8	7,8	6,1
320						6,7	4,4	2,4
325							4,1	2,1
355							2,4	

Main boom 105 ft

Radius	Jib length in (ft) 66	135	174	213	253	292	331	371
(ft)	lbs	lbs	lbs	lbs	lbs	lbs	lbs	lbs
95	93,7							
115	74,2							
135		58,4						
155		49,2	47,4					
180		40,5	39,0	37,3				
185		33,4	37,6	35,9				
200			33,8	32,2	30,4			
220			29,6	28,1	26,4			
225				27,2	25,5	23,8		
245				23,9	22,3	20,6	18,8	
260				21,7	20,2	18,5	16,8	
295					16,1	14,5	12,8	10,5
335						10,9	9,3	5,9
350							8,2	2,4
375							6,2	

Main boom 134 ft

Radius	Jib length in (ft) 66	135	174	213	253	292	331	371
(ft)	lbs	lbs	lbs	lbs	lbs	lbs	lbs	lbs
110	74,3							
125	63,5							
145		50,0						
170		40,8	39,0					
190		35,2	33,6	31,7				
195		34,0	32,5	30,6				
215			28,3	26,6	24,8			
235			24,8	23,2	21,5	19,6		
260				19,7	18,1	16,3	13,8	
270				18,5	16,9	15,1	12,7	
280					15,8	14,1	11,7	8,8
310					12,8	11,2	9,1	6,4
345						8,5	6,3	3,8
360							5,1	2,0
385							3,3	

Main boom 184 ft

Radius	Jib length in (ft) 66	135	174	213	253	292	331
(ft)	lbs	lbs	lbs	lbs	lbs	lbs	lbs
125,6	55,8						
150	44,6						
170		34,9					
190		30,1	28,2				
215		25,3	23,5	21,6			
235			20,6	18,7	16,2		
255			18,0	16,3	14,0		
260				15,7	13,5	10,5	
280				13,7	11,7	8,8	5,8
290				12,8	10,9	8,0	5,1
300					10,0	7,3	4,5
320					8,2	5,7	3,1
330					7,4	5,0	2,4
335						4,6	2,0
370						2,2	

Main boom 194 ft

Radius	Jib length in (ft) 66	135	174	213	253	292	331
(ft)	lbs	lbs	lbs	lbs	lbs	lbs	lbs
129,8	52,0						
155	33,4						
170		33,6					
195		27,9	26,0				
215		24,3	22,5	20,4			
220		23,5	21,7	19,8			
260			16,5	14,8	12,2	9,1	
285				12,4	10,2	7,2	4,2
290				12,0	9,8	6,9	3,9
295				11,5	9,3	6,5	3,6
300					8,9	6,2	3,3
310					8,0	5,4	2,7
315					7,6	5,0	2,4
335					6,0	3,5	
355						2,2	

Main boom 213 ft

Radius	Jib length in (ft) 66	135	174
(ft)	lbs	lbs	lbs
138,1	45,0		
160	37,3		
178		29,0	
205		23,8	21,8
210		23,0	21,1
220		21,5	19,6
225		20,7	18,9
230		20,0	18,3
235			17,6
240			17,0
245			16,4
250			15,9
255			15,3
260			14,8
265			14,3

Main boom 223 ft

Radius	Jib length in (ft) 125
(ft)	lbs
176,1	28,7
180	27,9
185	26,9
190	25,9
195	25,0
200	24,1
205	23,3
210	22,5
215	21,7
220	21,0
225	20,2

TLT 10539958 - M107135 Offiziell

Capacities in 1000 lbs with luffing jib (No. 2316.xx) 273,400 lbs counterweight + 125,700 lbs carbody counterweight. Above lift chart is for reference only. For actual lift duty and complete chart with all available configurations please refer to lift chart in operator's cab or manual.

Lift chart – luffing jib (No. 2316.xx)

Main boom angle 45°

Main boom 66 ft

Radius	Jib length in (ft) 66	135	174	213	253	292	331
(ft)	lbs	lbs	lbs	lbs	lbs	lbs	lbs
115	73,8						
170		43,3					
185		38,8					
225			27,8				
235				24,1			
260				18,8			
265					15,7		
300					11,4	9,2	
330						6,5	3,7
335						6,1	3,6
360							2,1

Main boom 105 ft

Radius	Jib length in (ft) 66	135	174	213	253	292	331
(ft)	lbs	lbs	lbs	lbs	lbs	lbs	lbs
137,5	53,1						
145	49,7						
194		31,5					
215		27,3					
227			23,6				
250			20,4				
260				17,4			
290				14,3			
295					12,2		
325					9,7	7,9	
360						5,2	2,7
365						4,8	2,4
370							2,1

Main boom 134 ft

Radius	Jib length in (ft) 66	135	174	213	253	292
(ft)	lbs	lbs	lbs	lbs	lbs	lbs
158,4	39,7					
165	37,7					
215		23,4				
235		20,5				
249			17,1			
270			14,8			
280				12,0		
310				9,7		
315					7,1	
345					4,9	2,2

Main boom 184 ft

Radius	Jib length in (ft) 66	135	174
(ft)	lbs	lbs	lbs
193,2	22,7		
195	22,4		
200	21,6		
250		12,0	
260		11,2	
270		10,3	
285			6,4
295			5,6
300			5,3
305			4,9

Main boom 194 ft

Radius	Jib length in (ft) 66	135	174
(ft)	lbs	lbs	lbs
200,2	19,9		
210	18,5		
260		9,3	
270		8,5	
290			4,1
305			3,2
315			2,6

Main boom 213 ft

Radius	Jib length in (ft) 66	135
(ft)	lbs	lbs
214,1	14,7	
220	14,1	
225	13,5	
275		4,2
280		3,9
285		3,6
290		3,2

TLT 10539958 - M107135 Offiziell

Capacities in 1000 lbs with luffing jib (No. 2316.xx) 273,400 lbs counterweight + 125,700 lbs carbody counterweight. Above lift chart is for reference only. For actual lift duty and complete chart with all available configurations please refer to lift chart in operator's cab or manual.

Working range main boom 88° - 30°

Fixed jib (No.0906.21) offset 30°

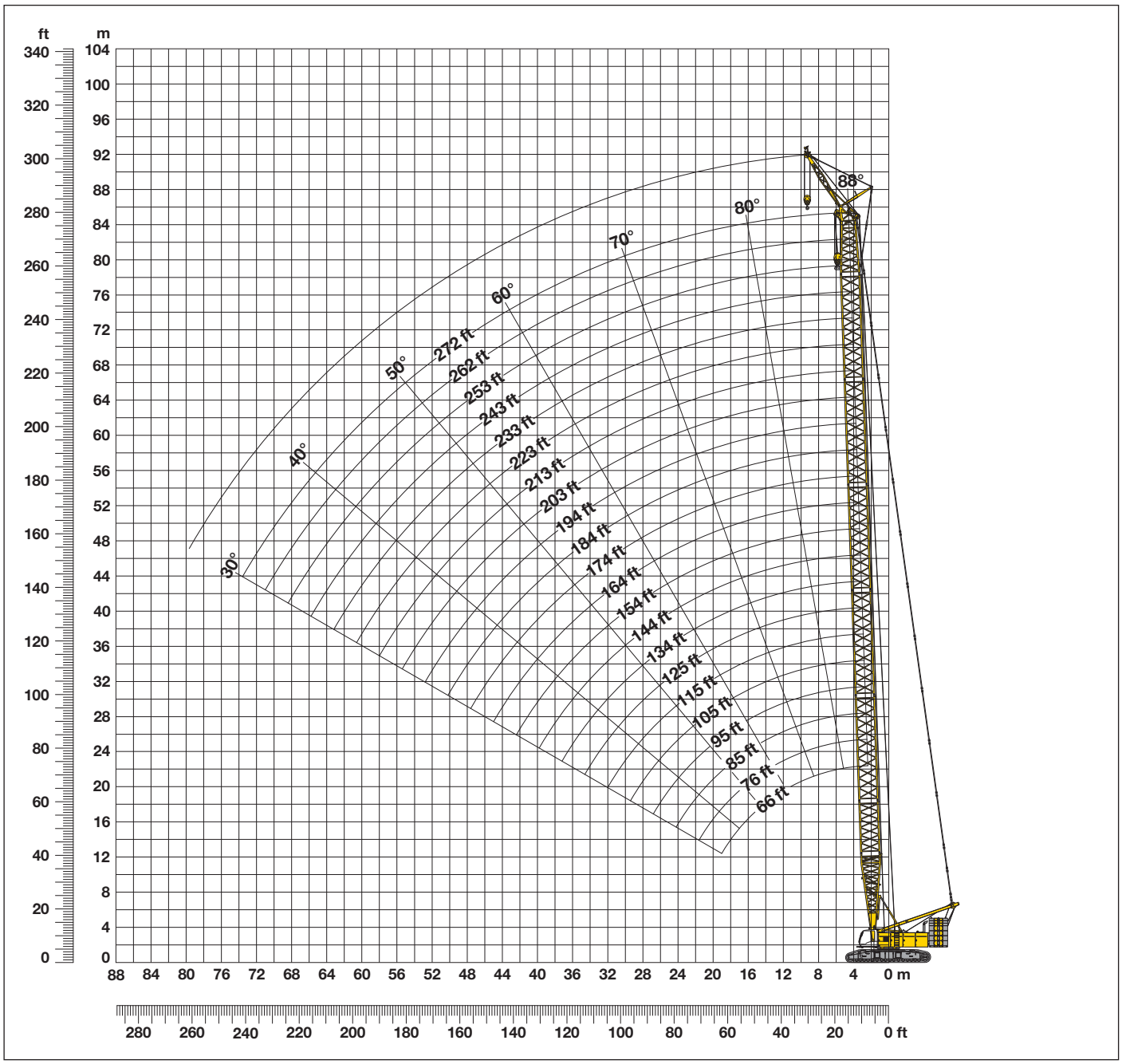

Main boom configuration (No. 2821.xx)

Configuration for boom lengths between 66 ft and 272 ft

	Length	Amount of boom extensions																					
Boom foot	33 ft	1	1	1	1	1	1	1	1	1	1	1	1	1	1	1	1	1	1	1	1	1	1
Boom insert	10 ft	1		1		1		1		1		1		1		1		1		1		1	
Boom insert	20 ft		1	1			1	1			1	1			1	1			1	1			1
Boom insert	40 ft				1	1	1	1	2	2	2	2	3	3	3	3	4	4	4	4	5	5	5
Boom head	23 ft	1	1	1	1	1	1	1	1	1	1	1	1	1	1	1	1	1	1	1	1	1	1
Boom length (ft)		66	76	85	95	105	115	125	134	144	154	164	174	184	194	203	213	223	233	243	253	262	272

*Actual lengths of boom sections are metric (e.g. 3 m, 6 m, 7 m, 10 m, 12 m). The figures shown above are approximate conversions to feet.

Lift chart - fixed jib 7 m (No. 0906.21) offset 30°

273,400 lbs counterweight and 125,700 lbs carbody counterweight

Main boom 66 ft

Radius	23
(ft)	lbs
45	142,3
50	135,4
55	128,3
60	123,3
65	119,2
70	115,1
75	111,8
80	109,8
85	108,2

Main boom 85 ft

Radius	23
(ft)	lbs
40	157,3
50	143,2
55	137,9
60	131,7
65	126,4
70	122,9
75	119,5
80	116,2
85	111,6
90	103,3
95	95,9
100	89,4
105	83,4

Main boom 105 ft

Radius	23
(ft)	lbs
40	162,7
50	149,5
60	138,4
70	128,9
80	120,6
85	111,1
90	102,9
95	95,5
100	89,1
105	83,2
110	78,0
115	73,2
120	68,8

Main boom 125 ft

Radius	23
(ft)	lbs
35	173,8
40	166,8
50	154,4
60	143,4
70	135,2
80	119,7
90	101,9
100	88,1
110	77,1
120	68,0
130	60,5
135	57,2
140	54,0

Main boom 144 ft

Radius	23
(ft)	lbs
30	184,1
40	169,8
50	157,2
60	148,4
70	139,6
80	118,9
90	101,1
100	87,3
110	76,2
120	67,2
130	59,8
140	53,4
155	45,3

Main boom 164 ft

Radius	23
(ft)	lbs
26,6	188,4
30	185,3
40	171,7
50	160,5
60	152,4
70	141,0
80	117,9
90	100,0
100	86,2
120	66,1
140	52,3
160	42,0
175	33,4

Main boom 184 ft

Radius	23
(ft)	lbs
27,3	187,3
30	186,5
40	174,1
50	163,5
60	154,2
70	141,1
80	117,1
100	85,2
120	65,3
140	51,3
160	41,0
180	33,1
190	29,8

Main boom 203 ft

Radius	23
(ft)	lbs
28	186,2
30	186,2
40	175,9
50	166,1
60	156,7
80	116,1
100	84,1
120	64,1
140	50,1
160	39,8
180	31,9
200	25,6
205	24,2

Main boom 223 ft

Radius	23
(ft)	lbs
28,7	185,1
30	185,1
40	176,9
60	155,1
80	115,1
100	83,1
120	63,0
140	49,0
160	38,7
180	30,8
200	24,5
220	19,4
225	18,2

Main boom 243 ft

Radius	23
(ft)	lbs
29,4	183,8
30	183,8
40	177,2
60	157,7
80	114,1
100	81,9
120	61,8
140	47,7
160	37,4
180	29,5
200	23,2
220	18,1
240	13,8

Main boom 262 ft

Radius	23
(ft)	lbs
30	181,7
40	176,6
60	161,7
80	113,2
100	80,9
120	60,7
140	46,5
160	36,2
180	28,3
200	22,1
220	16,9
240	12,7
260	8,9

Main boom 272 ft

Radius	23
(ft)	lbs
30,4	180,5
40	176,4
60	161,7
80	112,7
100	80,3
120	60,1
140	45,9
160	35,6
180	27,7
200	21,4
220	16,3
240	12,1
265	7,0

TLT 10539958 - M107135 Offiziell

Capacities in 1000 lbs with fixed jib (No. 0906.21) 273,400 lbscounterweight + 125,700 lbs carbody counterweight. Above lift chart is for reference only. For actual lift duty and complete chart with all available configurations please refer to lift chart in operator's cab or manual.

Working range main boom 88° – 30°

Fixed jib (No. 1507.20) offset 30°

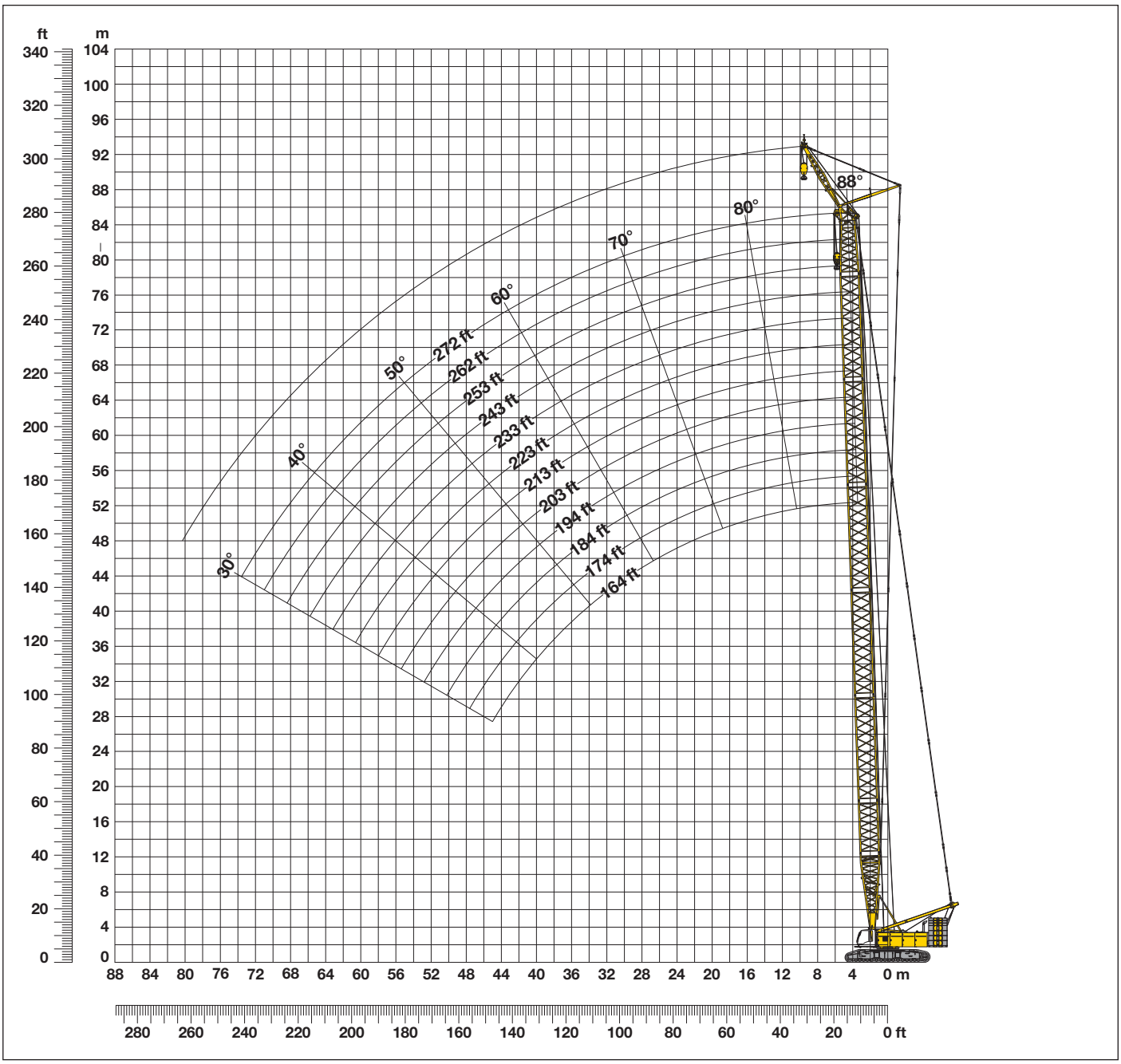

Main boom configuration (No. 2821.xx)

Configuration for boom lengths between 164 ft and 272 ft

	Length*	Amount of boom extensions																				
Boom foot	33 ft											1	1	1	1	1	1	1	1	1	1	1
Boom insert	10 ft											1		1		1		1		1		1
Boom insert	20 ft											1			1	1			1	1		1
Boom insert	40 ft											2	3	3	3	3	4	4	4	4	5	5	5
Boom head	23 ft											1	1	1	1	1	1	1	1	1	1	1	1
Boom length (ft)												164	174	184	194	203	213	223	233	243	253	262	272

*Actual lengths of boom sections are metric (e.g. 3 m, 6 m, 7 m, 10 m, 12 m). The figures shown above are approximate conversions to feet.

Lift chart - fixed jib 8 m (No. 1507.20) offset 30°

124 t counterweight and 57 t carbody counterweight

Main boom 164 ft

Radius	26
(ft)	lbs
26,2	257,9
30	257,9
40	251,6
50	220,5
60	175,2
70	141,2
80	117,2
90	99,3
100	85,4
120	65,4
140	51,4
160	41,1
175	34,9

Main boom 174 ft

Radius	26
(ft)	lbs
26,7	257,9
30	257,9
40	247,6
50	219,6
60	174,9
70	140,9
80	116,8
100	85,0
120	65,0
140	51,1
160	40,8
180	32,8
185	31,1

Main boom 184 ft

Radius	26
(ft)	lbs
27,1	257,9
30	257,9
40	246,1
50	217,9
60	174,5
70	140,4
80	116,3
100	84,4
120	64,4
140	50,4
160	40,1
180	32,2
195	27,3

Main boom 194 ft

Radius	26
(ft)	lbs
27,4	257,9
30	257,9
40	247,6
50	216,5
60	174,1
70	140,0
80	115,8
100	83,9
120	63,8
140	49,8
160	39,5
180	31,6
200	25,3

Main boom 203 ft

Radius	26
(ft)	lbs
27,8	257,9
30	257,9
40	251,4
50	212,0
60	173,8
80	115,3
100	83,2
120	63,2
140	49,1
160	38,8
180	30,9
200	24,6
210	21,9

Main boom 213 ft

Radius	26
(ft)	lbs
28,2	257,9
30	257,9
40	257,9
50	209,6
60	173,4
80	114,9
100	82,8
120	62,7
140	48,7
160	38,4
180	30,5
200	24,2
220	19,0

Main boom 223 ft

Radius	26
(ft)	lbs
28,6	257,2
30	256,7
40	251,7
60	172,3
80	114,4
100	82,2
120	62,1
140	48,0
160	37,6
180	29,8
200	23,5
220	18,3
225	17,1

Main boom 233 ft

Radius	26
(ft)	lbs
29	243,6
30	243,6
40	239,2
60	170,7
80	113,9
100	81,6
120	61,5
140	47,4
160	37,0
180	29,2
200	22,9
220	17,7
235	14,4

Main boom 243 ft

Radius	26
(ft)	lbs
29,3	223,1
40	217,8
60	167,9
80	113,3
100	81,0
120	60,8
140	46,7
160	36,3
180	28,4
200	22,1
220	17,0
240	12,7
245	11,7

Main boom 253 ft

Radius	26
(ft)	lbs
29,7	212,7
40	212,7
60	168,8
80	112,9
100	80,5
120	60,3
140	46,2
160	35,8
180	27,9
200	21,6
220	16,5
240	12,2
255	9,3

Main boom 262 ft

Radius	26
(ft)	lbs
30,1	196,3
40	193,6
60	165,4
80	112,4
100	80,0
120	59,7
140	45,5
160	35,1
180	27,2
200	20,9
220	15,8
240	11,5
260	7,2

Main boom 272 ft

Radius	26
(ft)	lbs
30,4	183,7
40	181,2
60	159,3
80	111,9
100	79,4
120	59,1
140	44,9
160	34,5
180	26,6
200	20,3
220	15,1
240	10,8
270	4,2

TLT 10539958 - M107135 Offiziell

Capacities in 1000 lbs with fixed jib (No. 1507.20) 273,400 lbs counterweight + 125,700 lbs carbody counterweight. Above lift chart is for reference only. For actual lift duty and complete chart with all available configurations please refer to lift chart in operator's cab or manual.

LR 1300 SX—10563868—02/2014 Subject to change without notice.

Liebherr-Werk Nenzing GmbH
Dr. Hans Liebherr Str. 1, 6710 Nenzing/Austria
Tel.: +43 50809 41–473, Fax: +43 50809 41–499
crawler.crane@liebherr.com, www.liebherr.com
facebook.com/LiebherrConstruction