Telescopic Crawler Crane
Grue télescopique sur chenilles

LTR 1220

Technical Data
Caractéristiques techniques

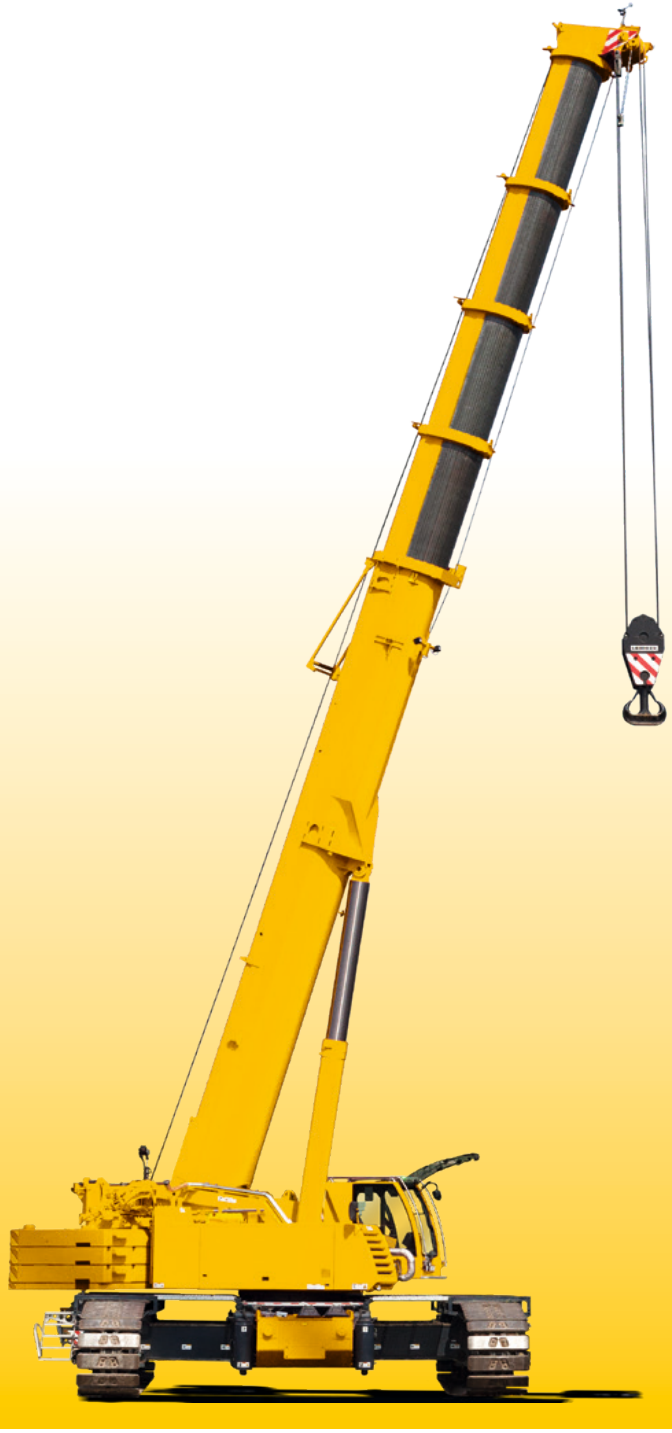

LIEBHERR

Table of content
Tables des matières

Technical Data
Caractéristiques technique

Dimensions · Encombrement	3 – 4
Crane data · Dates de la grue	5
Transportation plan · Plan de transport	6 – 13
Overview of load charts · Aperçu des tableaux de charge	14 – 15
T	16 – 19
TNZK	20 – 46
TVNZK	47 – 73
THK	74 – 77
Equipment · Equipement	78 – 79
Description of symbols · Explication des symboles	80
Remarks · Remarques	81

Dimensions
Encombrement

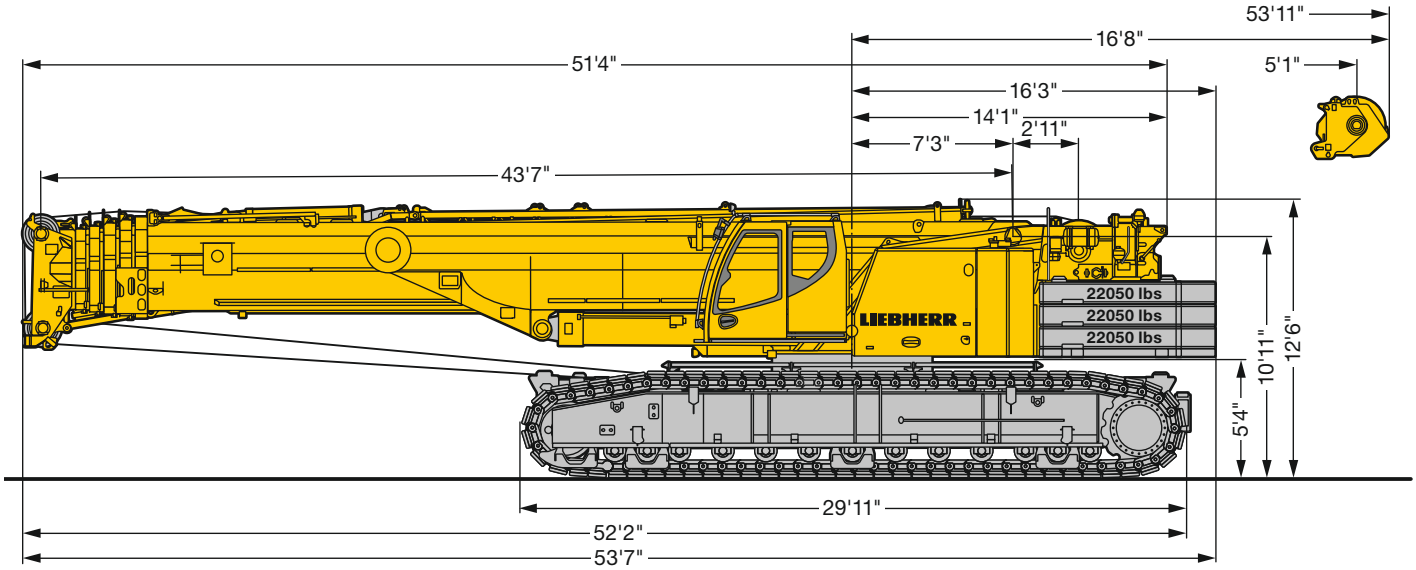

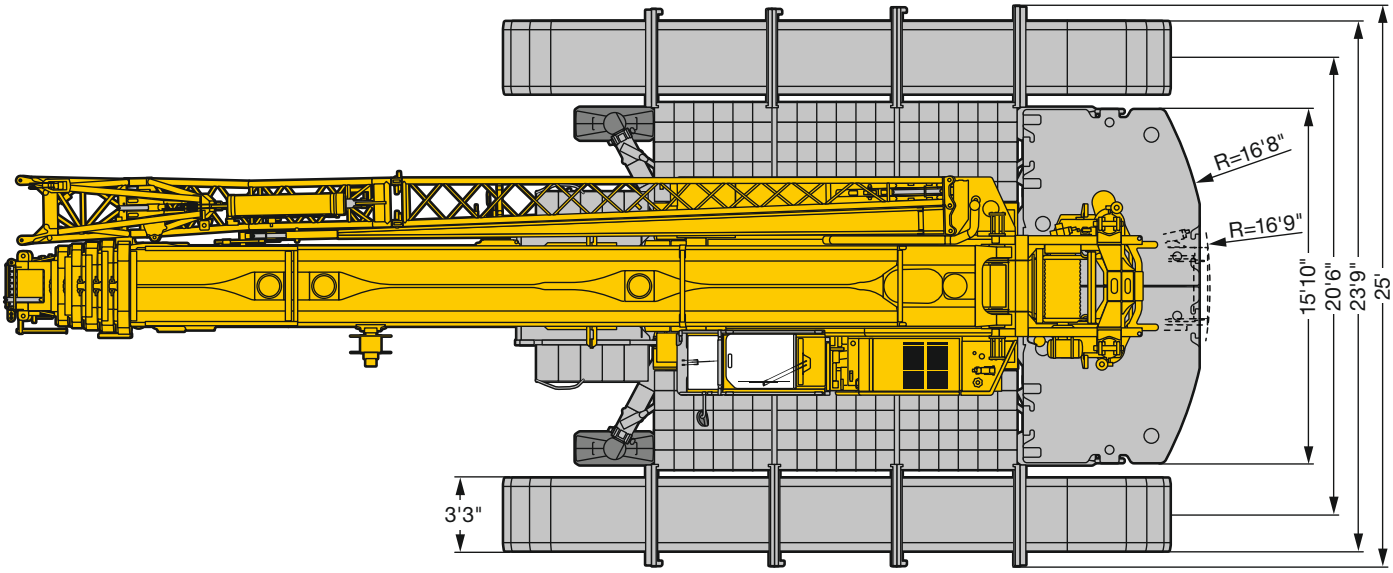

US2786.01

Dimensions
Encombrement

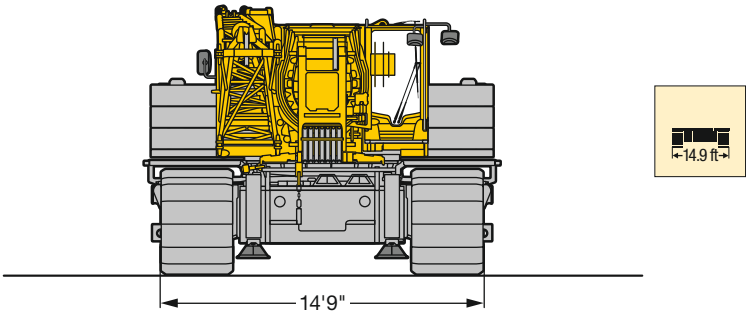

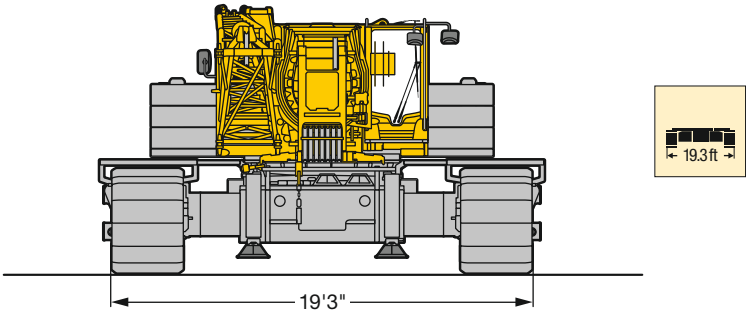

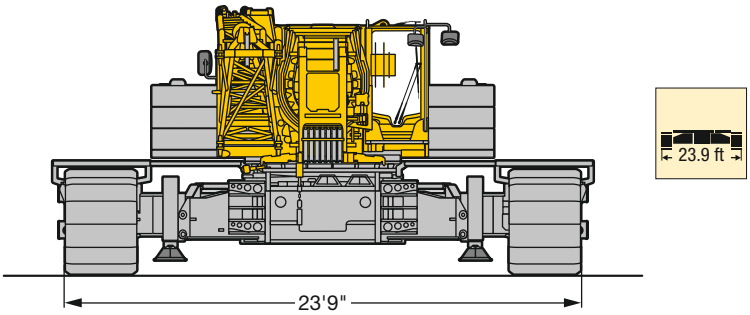

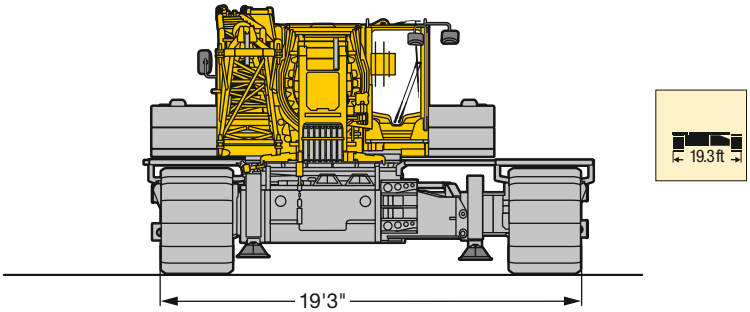

US2803.01

Crane data
Dates de la grue

F	Total driving force Puissance propulsive totale	254000 lbs
G	Total weight with 154350 lbs counterweight, 44100 lbs central ballast, 3-sheave hook block and 3.28 ft track pads Poids total avec contrepoids de 154350 lbs, lest central de 44100 lbs, moufle à crochet à 3 poulies et des tuiles de 3.28 ft	~ 397900 lbs
P	Average ground pressure without jack-up cylinders at ~397900 lbs total weight and with 3.28 ft track pads Pression au sol moyenne sans vérin Jack-up pour un poids total de ~397900 lbs et des tuiles de 3.28 ft	16.5 lbs / inch²
mph	normal gear · marche normale rapid gear · marche rapide	0 – 0.37 mph 0 – 1.55 mph
	Max. permissible gradability Pente admissible maxi.	47 %

Load kips Forces de levage kips	No. of sheaves Poulies	No. of lines Brins	Weight lbs Poids lbs
332.9	9	16	4400
314.4	7	15	3300
237.4	5	11	2866
155.6	3	7	2292
68.7	1	3	1851
23.1	–	1	1102

Drive Mécanismes	infinitely variable en continu	Rope diameter / Rope length Diamètre du câble / Longueur du câble	Max. single line pull Effort au brin maxi.
1	0 – 426 ft/min single line ft/min au brin simple	0'9" / 920 ft	23605 lbs
2	0 – 426 ft/min single line ft/min au brin simple	0'9" / 1150 ft	23605 lbs
360°	0 – 1.8 rpm		
	approx. 50 seconds to reach 82° boom angle env. 50 s jusqu'à 82°		
	approx. 420 seconds for boom extension from 44 ft – 197 ft env. 420 s pour passer de 44 ft – 197 ft		

Transportation plan
Plan de transport

Without slewing platform counterweight and without centre counterweight · Sans contrepoids de la partie tournante et sans contrepoids central

Basic machine, width 16'5", double grouser crawler carrier 3'3"
Machine de base, largeur 16'5", 2 nervures longerons 3'3"

203930 lbs

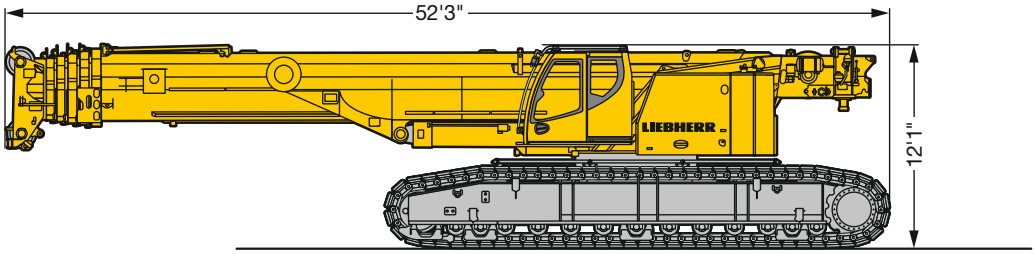

Basic machine, width 9'10", with jack-Up cylinder and traverse beam
Machine de base, largeur 9'10", avec verin Jack-Up, avec traverse

121900 lbs

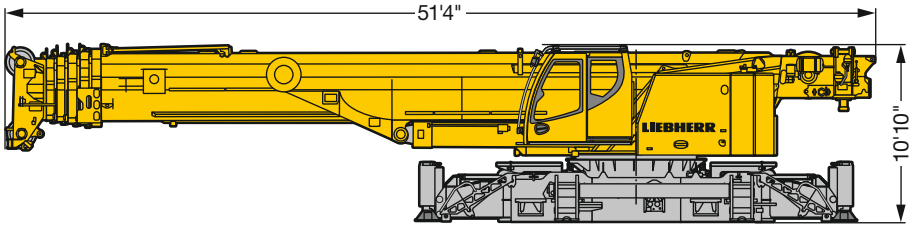

Basic machine, width 9'10", with jack-Up cylinder, **without** traverse beam
Machine de base, largeur 9'10" avec verin Jack-Up, **sans** traverse

105820 lbs

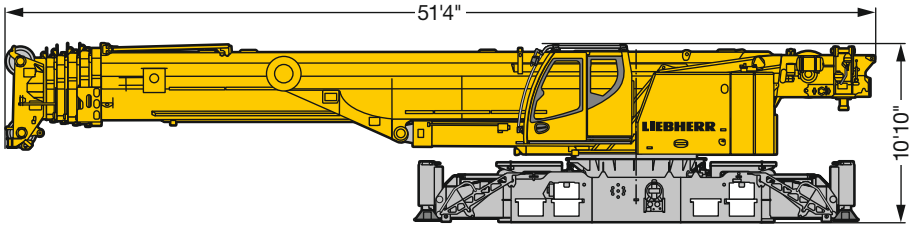

Basic machine, width 9'10", without jack-Up cylinder, **without** traverse beam
Machine de base, largeur 9'10" sans verin Jack-Up, **sans** traverse

99200 lbs

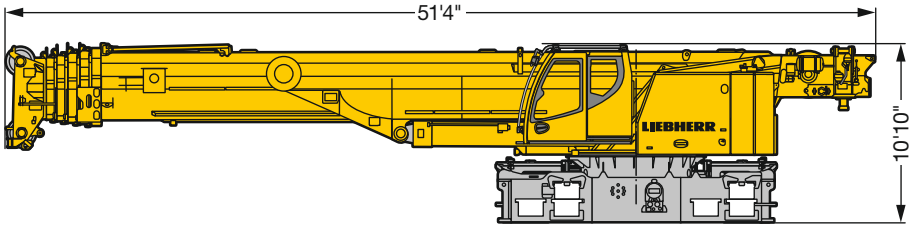

US2626.02

Transportation plan
Plan de transport

Crawler carrier, 2 x, 2-bar crawler shoes, width 3'3"
Longerons, 2 x, tuiles 2 nervures, largeur 3'3"

39500 lbs (2x)

41000 lbs (2x) 3)

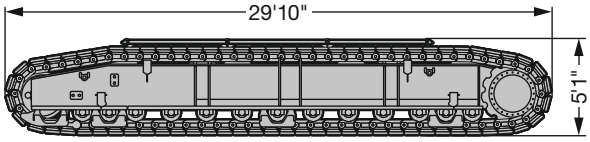

Winch 2 incl. rope
Treuil 2 avec câble

(1x)

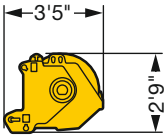

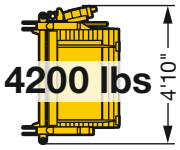

Center counterweight
Contrepoids de base

(2x)

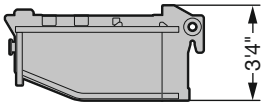

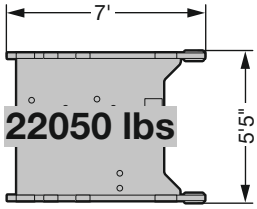

Part A / Partie A
Superstructure ballast
Contrepoids de la partie tournante

(1x)

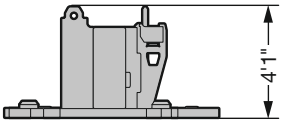

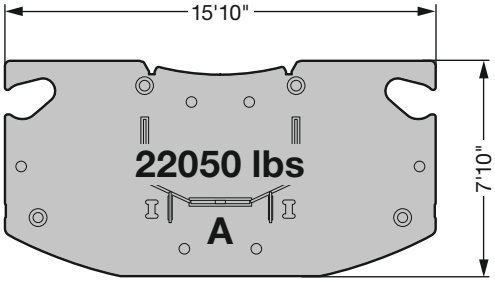

Part B, C / Partie B, C
Superstructure ballast
Contrepoids de la partie tournante

(3x + 3x)

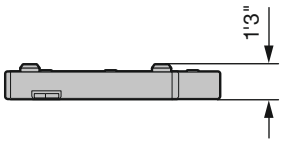

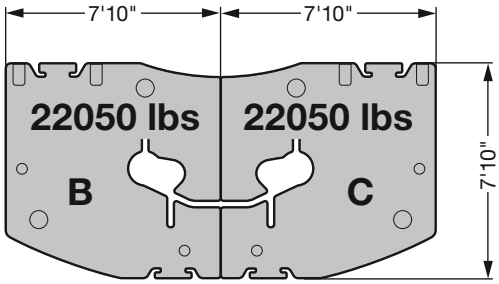

US2627

	Part A / Partie A à 22050 lbs	Part B / Partie B à 22050 lbs	Part C / Partie C à 22050 lbs
110250 lbs	1 x	2 x	2 x
154350 lbs*	1 x	3 x	3 x

* optional · en option

Transportation plan A
Plan de transport A

~121250 lbs

1a

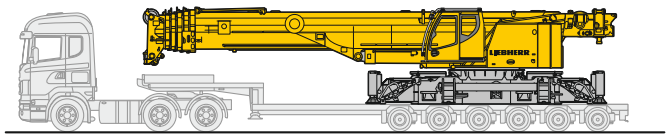

2a

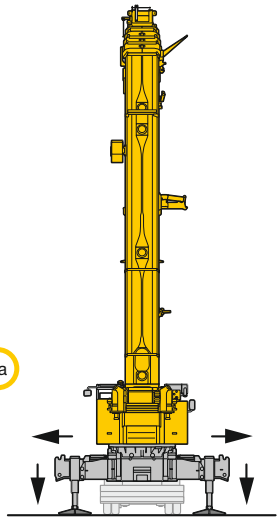

3a

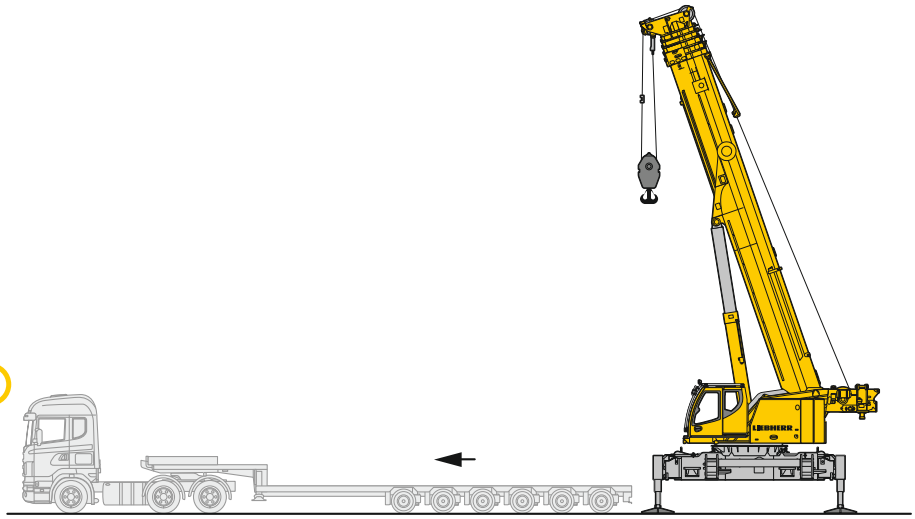

Transportation plan A
Plan de transport A

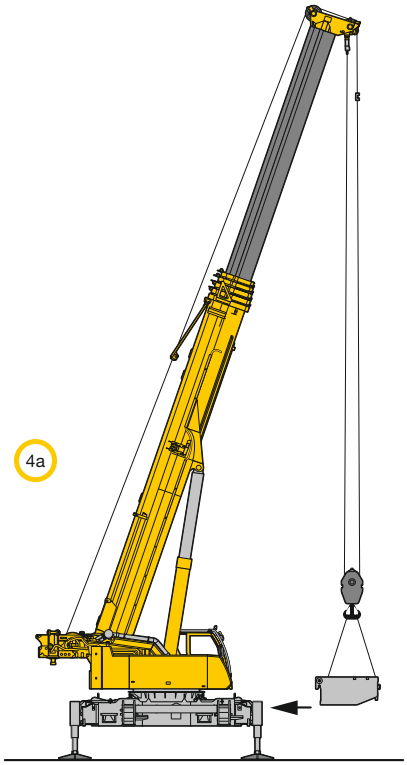

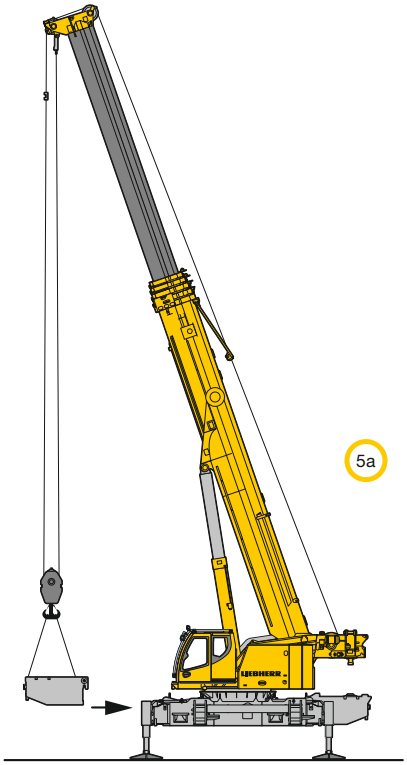

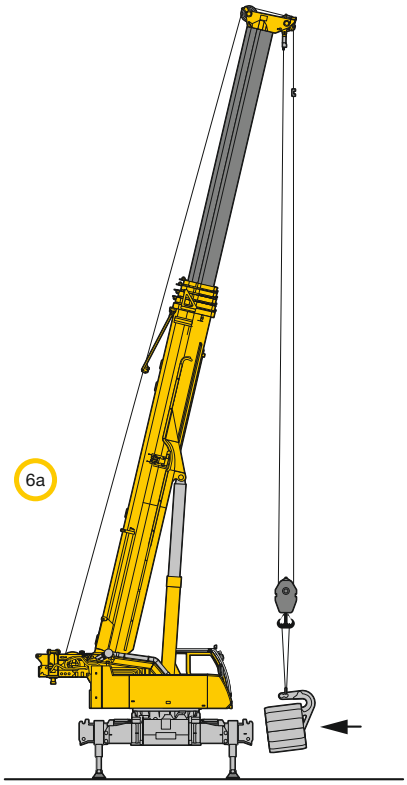

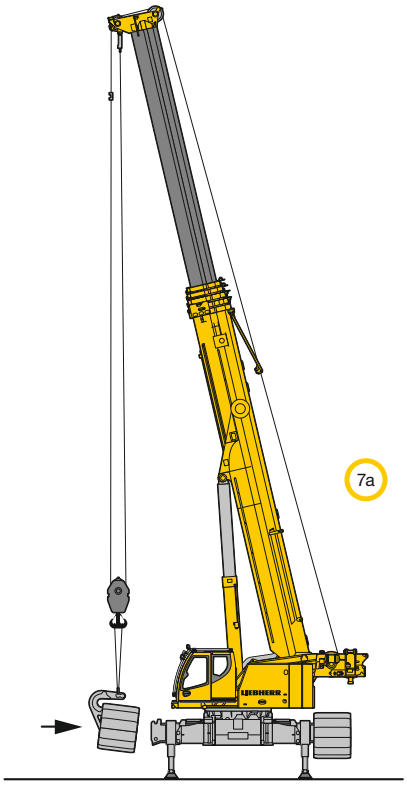

Transportation plan A
Plan de transport A

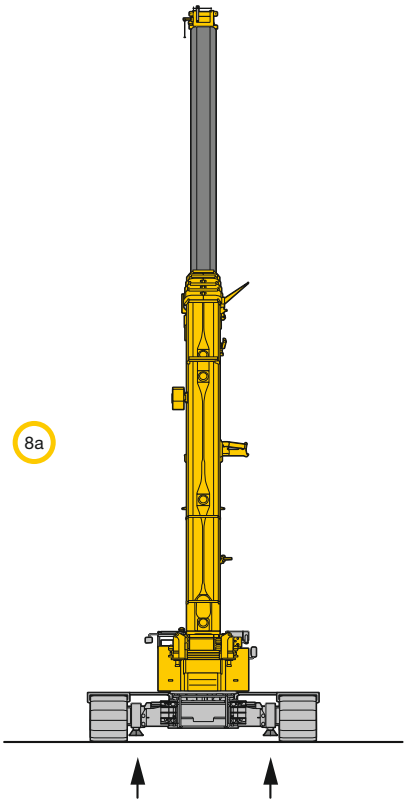

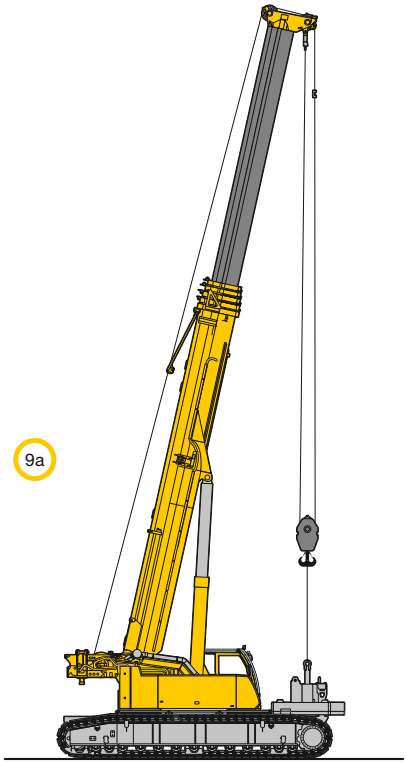

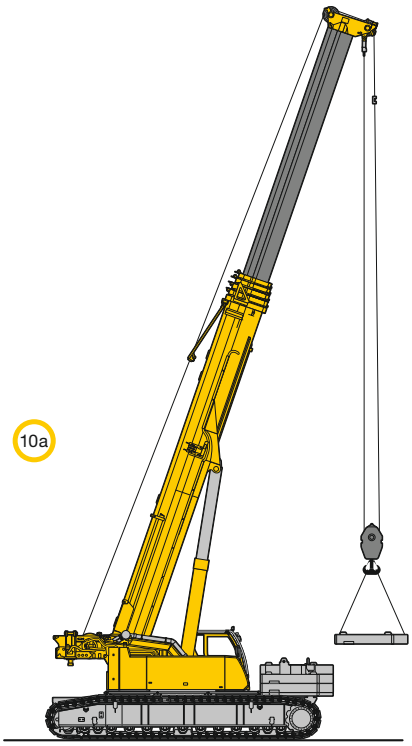

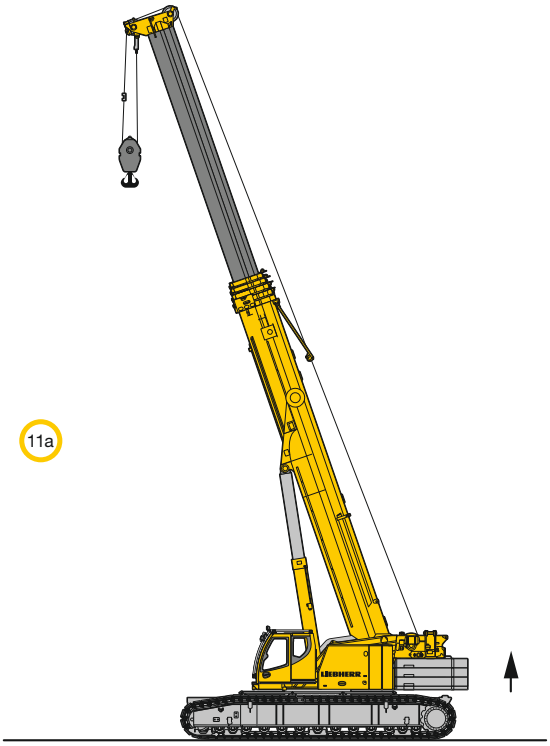

US2628.01

Transportation plan B
Plan de transport B

~ 105800 lbs

1b

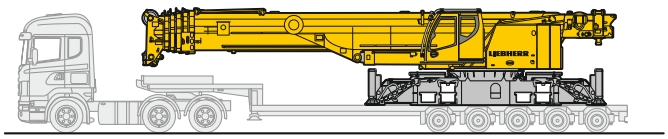

2b

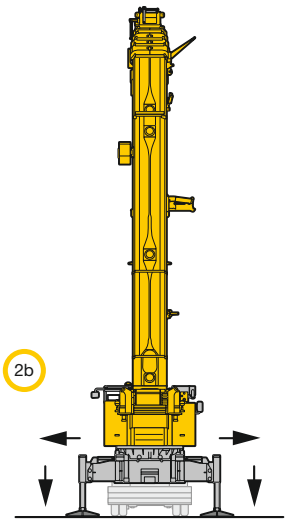

3b

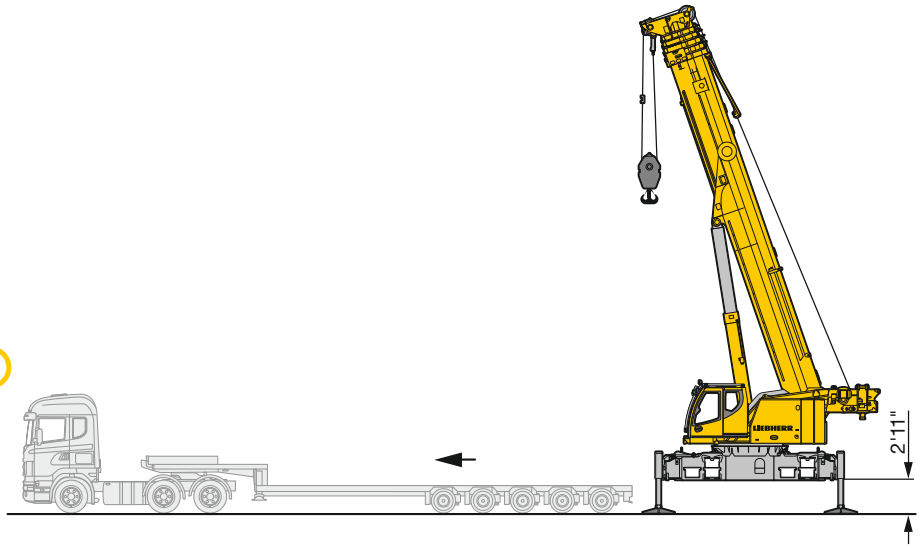

4b

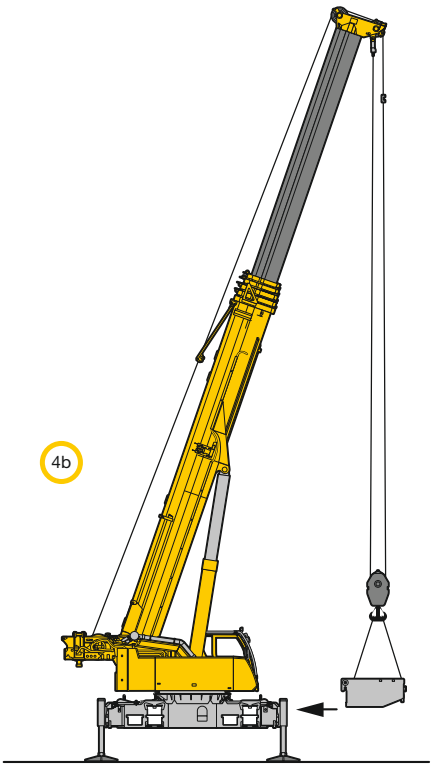

5b

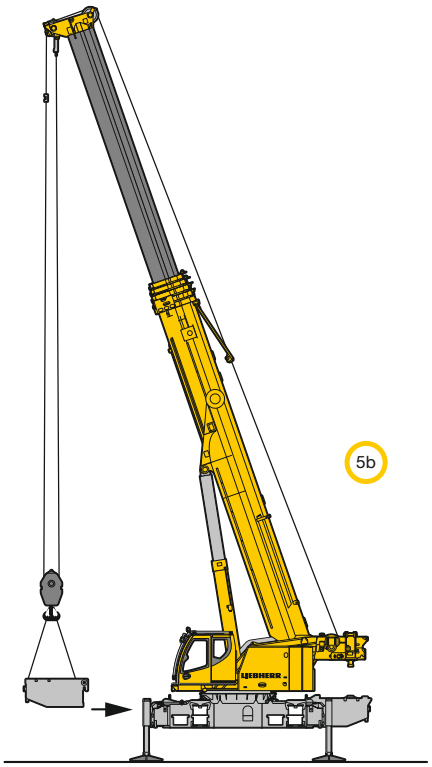

Transportation plan B
Plan de transport B

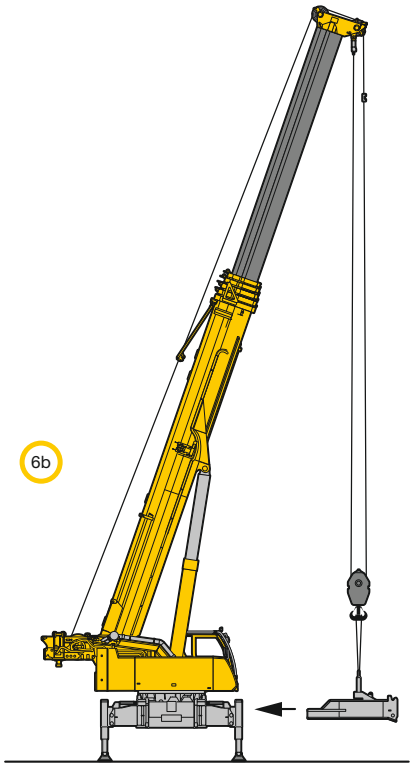

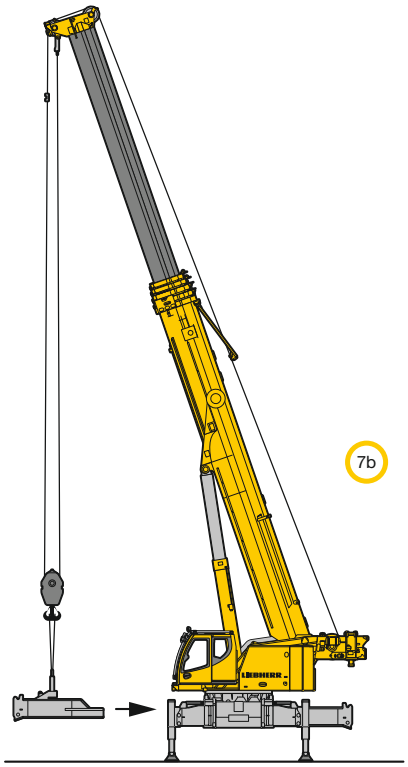

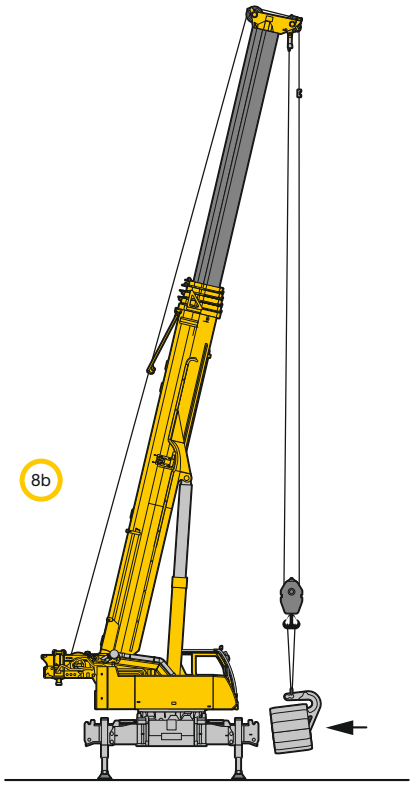

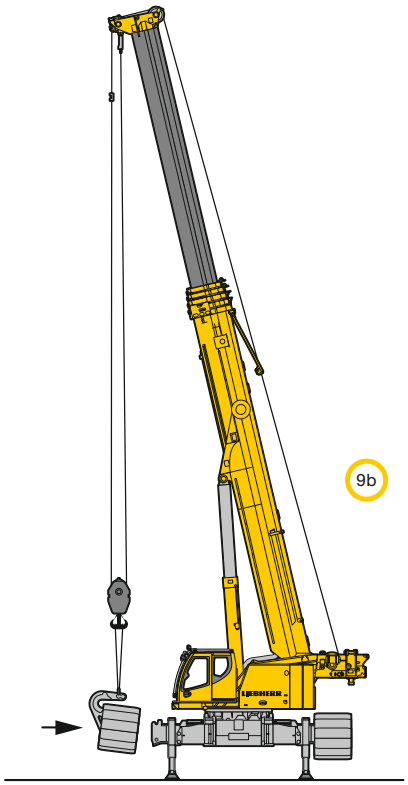

Transportation plan B
Plan de transport B

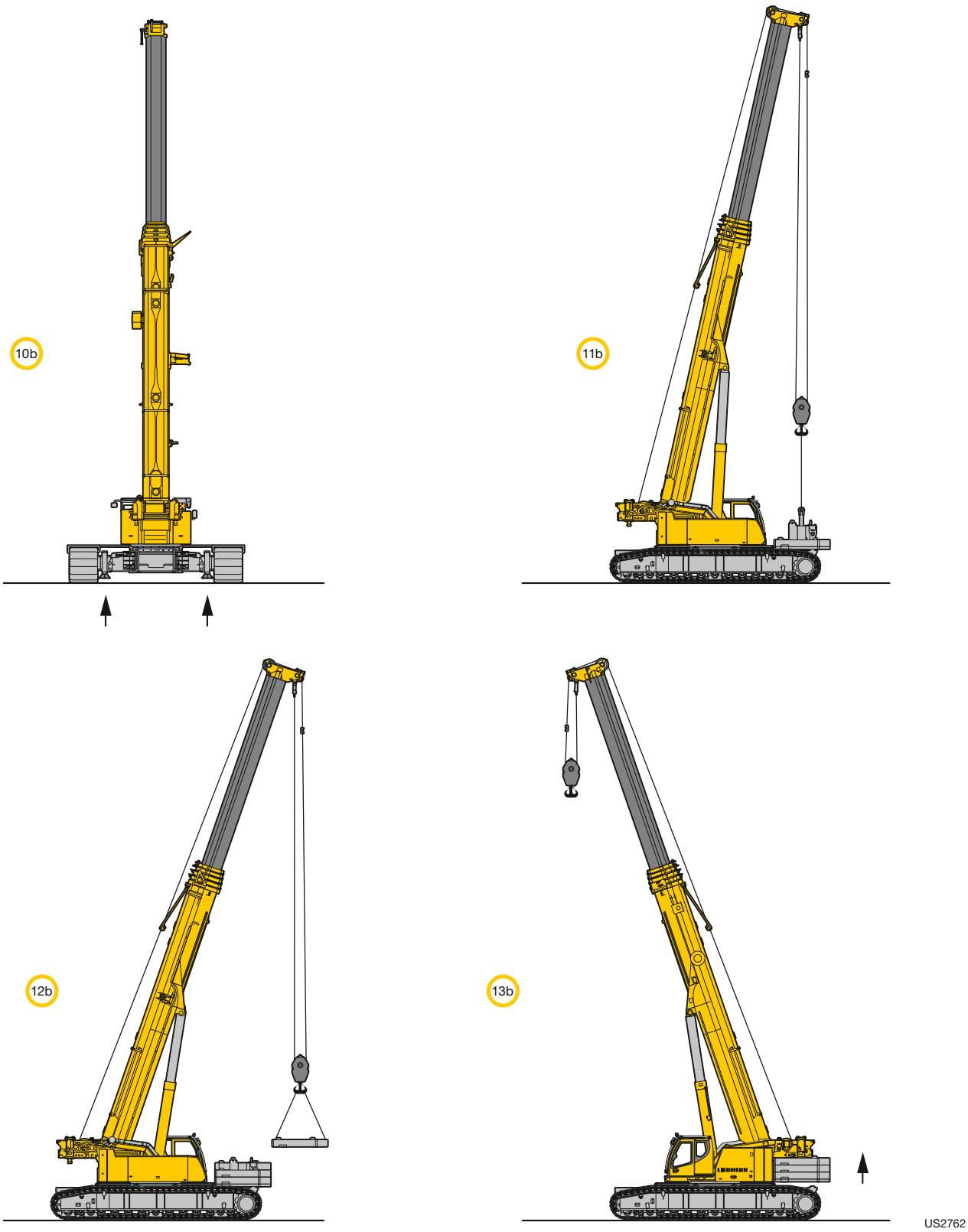

Overview of load charts
Aperçu des tableaux de charge

T	23.9 ft	19.3 ft	14.9 ft
154350 lbs 110230 lbs 66100 lbs 22050 lbs 0 lbs / 44100 lbs	n.h. ±10° / 360°	n.v. / n.h. ±30° / 360°	n.v. / n.h. ±30° / 360°
0 lbs / 0 lbs	n.h. ±10° / 360°	n.v. / n.h. ±30° / 360°	n.v. / n.h. ±30° / 360°

T / 11 ft HK	23.9 ft	19.3 ft	14.9 ft
154350 lbs 110230 lbs 66100 lbs 22050 lbs 0 lbs / 44100 lbs	360°	n.v. / n.h. ±30° / 360°	n.v. / n.h. ±30° / 360°
0 t / 0 t	360°	n.v. / n.h. ±30° / 360°	n.v. / n.h. ±30° / 360°

T / K NZK	23.9 ft	19.3 ft	14.9 ft
154350 lbs 110230 lbs 66100 lbs / 44100 lbs	360°	360°	–
22050/0 lbs / 44100 lbs	360°	–	–

T / V / K NZK	23.9 ft	19.3 ft	14.9 ft
154350 lbs 110230 lbs 66100 lbs / 44100 lbs	360°	360°	–
22050 lbs / 44100 lbs	360°	–	–

ballast versions see operation manual · variantes de lestage, voir le manuel d'instructions

n.v. / n.h. = over front/rear · en avant/arrière

Overview of load charts
Aperçu des tableaux de charge

T	19.3 ft
110230 lbs 66100 lbs 22050 lbs 0 lbs 44100 lbs	± 0°/180°
0 lbs 0 lbs	± 0°/180°

T 11 ft HK	19.3 ft
110230 lbs 66100 lbs 22050 lbs 0 lbs 44100 lbs	± 0°/180°
0 lbs 0 lbs	± 0°/180°

T K NZK	19.3 ft
154350 lbs 110230 lbs 66100 lbs 44100 lbs	—
22050/0 lbs 44100 lbs	—

T V K NZK	19.3 ft
154350 lbs 110230 lbs 66100 lbs 44100 lbs	—
22050 lbs 44100 lbs	—

ballast versions see operation manual · variantes de lestage, voir le manuel d'instructions

Lifting capacities
Forces de levage

T

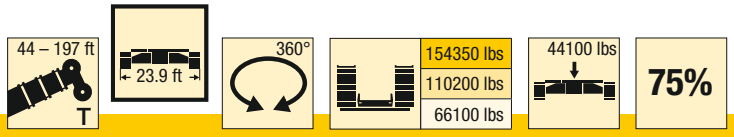

ft	44 ft *	44 ft	58 ft	72 ft	86 ft	100 ft	114 ft	128 ft	142 ft	156 ft	171 ft	185 ft	197 ft	ft
10	485	295.4	295.4	295.4										10
11	330	295.4	295.4	295.4										11
12	323	294.1	295.2	293.9	240.9									12
13	311.2	290.2	289.5	288.3	261.8									13
14	292.4	277.9	278.2	276.9	263.7									14
15	277.9	266.7	266.9	263.5	259									15
16	265.4	256.1	255.8	249.8	244.8	216.9								16
17	254.2	246.2	245.8	240.2	235.6	216.5								17
18	244.5	237	237.4	231.7	226.3	215								18
19	235.5	228.2	229.4	223.2	217.7	212.1	176							19
20	226.9	219.7	221.2	215.2	210	205.8	175.4							20
22	211.2	204.3	206	201.3	195.8	191.7	174	117.7						22
24	196.8	190.7	192.5	188.7	183.5	179.3	171.7	124.8						24
26	183.3	178.6	180.4	177.6	172.6	168.4	167.1	120.8	99.5					26
28	170.3	167.7	169.5	167.6	163.1	160.6	158.2	116.4	98.7					28
30	157.3	157	159.2	158.7	154.4	153	149.6	111.9	96.2	81				30
32	143.3	143.3	150.1	150.5	146.4	145.4	141.8	107.6	93.4	79.6				32
34	126.7	126.7	141.5	142	139.1	138.1	134.8	103.4	90.4	77.9	64.6			34
36	99.3	99.3	133.3	133.9	132.7	131.8	128.5	99.2	87.4	75.9	63.8			36
38			125.9	126.5	125.8	125.9	122.8	95.1	84.9	73.9	62.5			38
40			118.8	119.5	118.9	120.4	117.3	91.2	82.6	71.9	61.2	52.1		40
45			101.7	104.2	103.5	105.5	104.2	82.7	76.8	67.1	57.7	49.8	41.8	45
50			68.8	90.8	93.3	92.3	90.8	75.1	70.9	62.8	54.3	47.1	40	50
55				82.2	82.3	81.3	80	68.7	65.5	58.8	51.1	44.6	38	55
60				72.1	73.4	72.4	71	63.4	60.6	54.9	48.2	42.2	36.1	60
65					65.9	64.9	63.5	59.7	56.1	51.3	45.6	39.9	34.3	65
70					59.7	58.6	57.2	56.6	52.2	48	43.1	37.9	32.6	70
75					52	53.2	51.7	53.5	48.5	45.1	40.9	36	31	75
80						48.5	47.2	48.8	45.3	42.4	38.8	34.2	29.5	80
85						44.4	45	44.6	42.2	39.9	36.9	32.5	28	85
90						39.4	42.4	40.9	39.2	37.9	35.1	30.9	26.7	90
95							39.2	37.6	36	35.9	33.3	29.5	25.4	95
100							36.3	34.7	33.9	33.8	31.6	28.1	24.3	100
105							28.2	32.1	31.8	31.3	29.9	26.8	23.2	105
110								29.7	30.4	28.9	28.3	25.7	22.2	110
115								27.5	28.3	26.7	26.7	24.5	21.2	115
120								20.5	26.3	25.4	25	23.5	20.3	120
125									24.5	23.8	23.2	22.5	19.4	125
130									22.4	22.7	21.5	21.1	18.6	130
135									12.6	21.4	19.9	19.6	17.8	135
140										19.9	18.9	18.1	17.1	140
145										17.1	18	16.8	16.5	145
150											16.8	15.5	15.7	150
155											15.7	14.4	14.6	155
160											12.2	13.3	13.5	160
165												12.3	12.5	165
170												11.4	11.5	170
175												7.7	10.6	175
180													9.8	180
185													8.1	185

* 0° = over rear/front · en arrière/avant

t_242_00090_00_001 / 00100_00_001 / 00101_00_001 / 00102_00_001

Lifting capacities
Forces de levage

T

44 – 197 ft | 19.3 ft | 360° | 154350 lbs / 110200 lbs / 66100 lbs | 44100 lbs | 75%

↔ ft	44 ft	58 ft	72 ft	86 ft	100 ft	114 ft	128 ft	142 ft	156 ft	171 ft	185 ft	197 ft	↔ ft
10	295.4	295.4	295.4										10
11	295.4	295.4	295.4										11
12	294.1	295.2	293.9	240.9									12
13	290.2	289.5	288.3	261.8									13
14	277.9	278.2	276.9	263.7									14
15	266.7	266.9	263.5	259									15
16	256.1	255.8	249.8	244.8	216.9								16
17	246.2	245.8	240.2	235.6	216.5								17
18	237	237.4	231.7	226.3	213.6								18
19	228.2	229.4	223.2	217.7	207.7	176							19
20	219.7	221.2	215.2	210	200.8	175.4							20
22	204.3	206	201.3	195.8	187	169.7	117.7						22
24	190.7	192.5	188.7	183.5	175.5	160.4	124.8						24
26	178.6	180.4	177.6	172.6	168.2	151.3	120.8	99.5					26
28	167.7	169.5	167.6	162.5	158.7	143	116.4	98.7					28
30	156.8	159.1	158.7	151.4	147	135.6	111.9	96.2	81				30
32	142.5	145.4	146.1	140.2	137	128.8	107.6	93.4	79.6				32
34	126.7	132.6	133.6	130.4	127.6	120.8	103.4	90.4	77.9	64.6			34
36	99.3	121.8	122.7	123.7	119.8	113.3	99.2	87.4	75.9	63.8			36
38		112.4	113.3	116	112.5	106.7	95.1	84.9	73.9	62.5			38
40		105.5	107	107.6	106	100.5	91.2	82.6	71.9	61.2	52.1		40
45		88.9	90.6	90.9	90.1	87.6	82.6	76.8	67.1	57.7	49.8	41.8	45
50		68.8	78	78.2	77.4	76	73.1	70.9	62.8	54.3	47.1	40	50
55			68.1	68.2	67.3	66.2	66.8	64.9	58.8	51.1	44.6	38	55
60			60.2	60.3	59.4	59.3	59.9	58.1	54.9	48.2	42.2	36.1	60
65				53.7	52.8	54.6	53.3	51.9	51	45.6	39.9	34.3	65
70				48.3	47.9	49.1	47.8	47.1	46.5	43.1	37.9	32.6	70
75				43.7	45.1	44.3	43	42.9	42.4	40.9	36	31	75
80					41.2	40.3	39.1	39.8	38.4	38.1	34.2	29.5	80
85					37.8	36.8	35.9	36.3	35.6	34.8	32.5	28	85
90					34.8	33.8	33.9	33.2	32.7	32.2	30.9	26.7	90
95						31.1	31.7	30.4	30.4	29.4	29.1	25.4	95
100						28.8	29.3	28.2	28.2	27.4	26.7	24.3	100
105						26.7	27.2	26.2	26	25.6	24.5	23.2	105
110							25.2	24.7	24.1	23.6	22.5	22.2	110
115							23.5	23.3	22.3	21.8	20.6	20.8	115
120							20.5	21.7	20.7	20.1	18.9	19.1	120
125								20.3	19.4	18.6	17.3	17.6	125
130								19	18	17.1	15.9	16.1	130
135								12.6	16.7	15.8	14.6	14.8	135
140									15.5	14.6	13.4	13.6	140
145									14.4	13.5	12.3	12.5	145
150										12.5	11.2	11.4	150
155										11.5	10.2	10.4	155
160										10.7	9.4	9.5	160
165											8.5	8.7	165
170											7.8	7.9	170
175											7.1	7.1	175
180												6.4	180
185												5.8	185

t_242_00110_00_001 / 00111_00_001 / 00112_00_001

Lifting capacities
Forces de levage

T

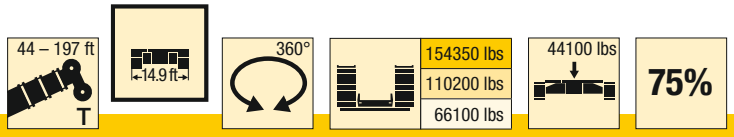

ft	44 ft	58 ft	72 ft	86 ft	100 ft	114 ft	128 ft	142 ft	156 ft	171 ft	185 ft	197 ft	ft
10	294	237.9	189.2										10
11	265.4	224	179.5										11
12	237.6	209.6	170.6	135.9									12
13	213.3	193.7	162.4	136.6									13
14	193.9	179.2	155.1	132.1									14
15	177.5	165.2	148.3	127.3									15
16	196.7	182.9	141.4	122.6	106								16
17	196.4	179.1	164.6	136.6	102.7								17
18	190.4	174.3	161.3	131.6	99.5								18
19	178.8	165.6	152.7	130.5	96.4	85.3							19
20	167.8	159.4	144	126.1	107.9	82.9							20
22	145.8	142.7	133	122.4	101.3	91.7	69.4						22
24	127.2	128.8	123.2	112.5	99.5	86.7	66.5						24
26	112.5	116.4	112.4	106.6	99.7	87.5	76.1	56.8					26
28	100.5	104.5	103.1	98.4	94.5	84.8	76.6	68					28
30	116.2	94.3	95.2	105.4	89.3	82.6	74.5	67.1	60.4				30
32	105.8	105.2	103.6	97.4	83.3	78.5	73.1	65.7	59.1				32
34	96.9	99.3	97.6	93.5	77.7	73.5	70.2	64.3	58.4	52.9			34
36	89.1	91.5	89.8	87.4	82.4	68.9	67.3	61.8	56.3	51			36
38		85.9	85.5	81.4	80.8	64.9	63.6	59.6	54.3	49.2			38
40		79.9	79.5	78.9	75.9	71.7	60	57.5	52.4	47.5	42.7		40
45		67.6	69.2	69.4	68.6	66.8	63.4	59.8	48.1	43.6	39.1	37.1	45
50		58.2	59.6	59.8	61.7	59.6	58.7	55.7	52.7	40	36	34.2	50
55			52.5	52.2	54	53.2	52.2	51.2	49.2	47.2	32.9	31.6	55
60			46.4	47.7	47.8	46.9	47.7	46.5	45	42.8	40.8	36.1	60
65				42.7	42.6	41.8	42.6	41.7	40.7	39.1	36.8	34.3	65
70				38.4	38.3	38.7	38.2	37.9	36.9	35.5	33.2	32.6	70
75				34.8	34.6	35.1	34.5	34.4	33.8	32.3	30.1	29.8	75
80					31.6	31.9	31.3	31.2	30.6	29.4	27.3	27.1	80
85					29	29.1	28.8	28.4	27.8	26.9	24.8	24.6	85
90					26.6	26.7	26.3	25.9	25.3	24.5	22.6	22.4	90
95						24.6	24.2	23.7	23.1	22.3	20.6	20.4	95
100						22.7	22.2	21.8	21.1	20.3	18.8	18.6	100
105						21	20.5	20	19.3	18.4	17.1	17	105
110							18.9	18.4	17.6	16.7	15.5	15.5	110
115							17.4	16.9	16.1	15.2	14	14.2	115
120							16.1	15.5	14.7	13.8	12.6	12.8	120
125								14.3	13.4	12.5	11.3	11.6	125
130								13.2	12.3	11.4	10.2	10.4	130
135								12.2	11.2	10.3	9.1	9.3	135
140									10.2	9.3	8.1	8.3	140
145									9.4	8.4	7.2	7.4	145
150										7.6	6.4	6.5	150
155										6.8	5.6	5.7	155
160										6.2	4.9	5	160
165											4.2	4.3	165
170											3.6	3.7	170
175											3	3.1	175
180												2.5	180

t_242_00120_00_001 / 00121_00_001 / 00122_00_001

Lifting heights
Hauteurs de levage

T

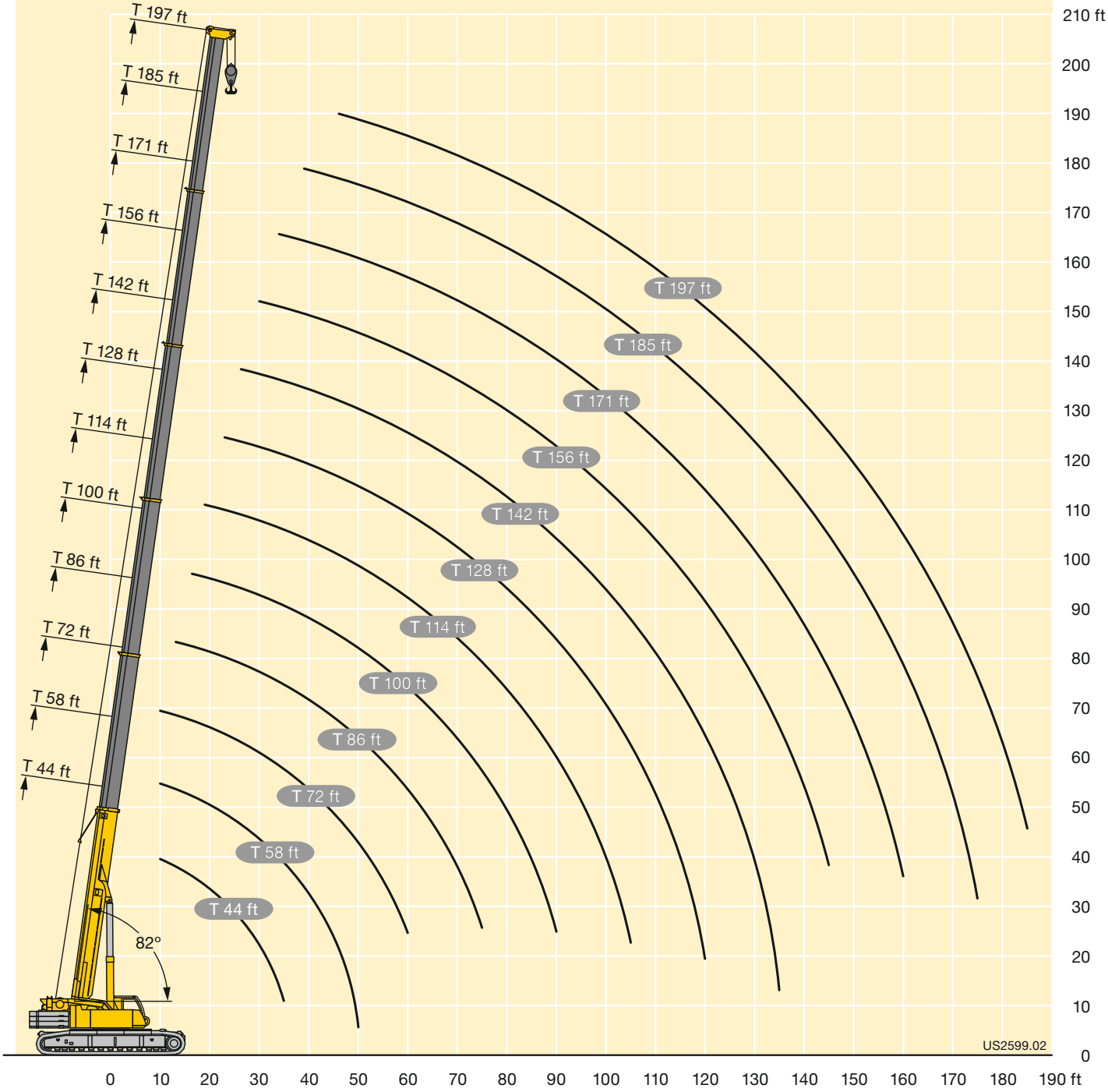

Lifting capacities
Forces de levage

TNZK

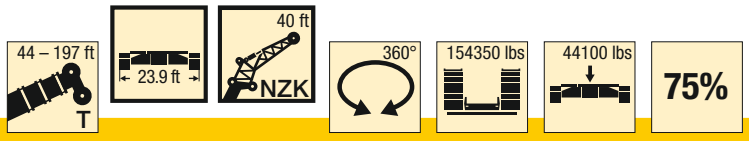

ft	44 ft			58 ft			72 ft			86 ft			100 ft			114 ft			ft
	40 ft			40 ft			40 ft			40 ft			40 ft			40 ft			
	0°	22.5°	45°	0°	22.5°	45°	0°	22.5°	45°	0°	22.5°	45°	0°	22.5°	45°	0°	22.5°	45°	
10	46.1																		10
11	46.1			46.1															11
12	46.1			46.1															12
13	46.1			46.1			46.1												13
14	46.1			46.1			46.1												14
15	46.1			46.1			46.1												15
16	46.1			46.1			46.1			46.1									16
17	46.1			46.1			46.1			46.1									17
18	46.1			46.1			46.1			46.1									18
19	46.1			46.1			46.1			46.1			46.1						19
20	46.1			46.1			46.1			46.1			46.1						20
22	46.1			46.1			46.1			46.1			46.1						22
24	46.1	36.8		46.1			46.1			46.1			46.1			46.1			24
26	46.1	35		46.1	36.6		46.1			46.1			46.1			46.1			26
28	46.1	33.3		46.1	35.1		46.1			46.1			46.1			46.1			28
30	45.7	31.8		46.1	33.7		46.1	34.5		46.1			46.1			46.1			30
32	44.4	30.5		46.1	32.4		46.1	33.3		46.1			46.1			46.1			32
34	42.9	29.3	23.2	46.1	31.2		46.1	32.2		46.1	33.2		46			45.8			34
36	41.4	28.2	23.2	45.9	30.1	23.2	46	31.2		46.1	32.2		45.3	32.6		45.3			36
38	39.5	27.2	23.1	44.7	29.1	23.2	45.8	30.2		45.6	31.3		44.5	31.7		44.5			38
40	37.3	26.2	22.7	43	28.2	23.2	44.5	29.3	23.2	45.1	30.4		43.2	30.9		43.5	31.5		40
45	32.5	24.1	21.5	38.5	26	22.3	40.7	27.3	22.7	43.2	28.4		39.6	29		40.3	29.7		45
50	28.7	22.3	20.5	34.3	24.3	21.3	37.2	25.6	21.8	39.9	26.7	22.3	36.3	27.4	22.6	37.4	28.1		50
55	25.6	20.8	19.8	30.8	22.7	20.5	33.9	24.1	21.1	36.9	25.3	21.6	33.5	26	21.8	34.8	26.6	22.1	55
60	23.2	19.5	19.2	27.8	21.4	19.9	31.2	22.8	20.4	34.2	23.9	20.9	31	24.7	21.2	32.4	25.4	21.5	60
65	21	18.5	19	25.3	20.2	19.4	28.8	21.6	19.9	31.8	22.8	20.4	28.9	23.5	20.7	30.3	24.3	21	65
70	19.2	17.6	10.4	23.3	19.2	19.1	26.6	20.6	19.5	29.5	21.8	19.9	26.8	22.5	20.2	28.5	23.3	20.5	70
75	17.6	17.4		21.4	18.4	19	24.7	19.7	19.1	27.5	20.9	19.5	25.1	21.7	19.8	26.8	22.4	20.1	75
80				19.8	17.7		22.9	18.9	19	25.7	20.1	19.2	23.4	20.8	19.5	25.2	21.6	19.8	80
85				18.5	17.3		21.4	18.3	18.9	24.2	19.3	19.1	22	20.1	19.3	23.8	20.9	19.5	85
90				17.3			20.1	17.7	18.9	22.7	18.7	19	20.6	19.4	19	22.4	20.2	19.3	90
95							18.9	17.4		21.4	18.2	19	19.4	18.8	18.7	21.2	19.7	19.1	95
100							17.9	17.3		20.2	17.7	19	18.3	18	18.1	20.1	19	18.9	100
105										19.2	17.4	19	17.3	17.1	17.3	19.1	18.4	18.3	105
110										18.3	17.3		16.3	16.2	16.5	18.1	17.7	17.6	110
115										17.5			15.5	15.4	15.7	17.3	16.9	17	115
120													14.7	14.7		16.5	16.2	16.4	120
125													14.1	14.1		15.7	15.6	15.8	125
130													13.5			15.1	15	15.2	130
135																14.5	14.4		135
140																14			140
145																13.5			145

t_242_01000_00_000

Lifting capacities
Forces de levage

TNZK

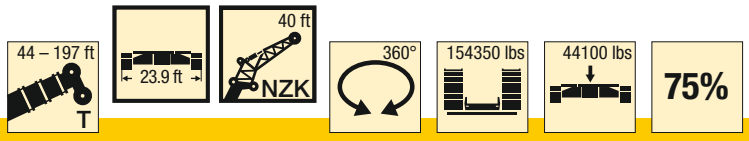

ft	128 ft			142 ft			156 ft			171 ft			185 ft			197 ft			ft
	40 ft			40 ft			40 ft			40 ft			40 ft			40 ft			
	0°	22.5°	45°	0°	22.5°	45°	0°	22.5°	45°	0°	22.5°	45°	0°	22.5°	45°	0°	22.5°	45°	
30	42.6			45.3															30
32	42.4			45.1															32
34	42.2			44.9															34
36	41.9			44.6			40.4												36
38	41.7			44.3			40.2												38
40	41.2			44			40			34.7									40
45	38.8			43			39.3			34.3									45
50	36	28.3		41.8	30.5		38.6			33.9			28.5						50
55	33.6	27	22.2	40.6	29		37.8	29.3		33.5			28			24			55
60	31.4	25.7	21.7	39.4	27.6	22.3	37	27.9	22.6	32.9	27.6		27.6			23.6			60
65	29.3	24.7	21.1	37.8	26.4	21.8	36.1	26.8	22	32.1	26.5		27.3			23.2	22.2		65
70	27.4	23.7	20.7	36	25.3	21.3	34.9	25.7	21.5	31	25.5	21.5	26.8	24.8		22.9	22		70
75	25.7	22.9	20.3	34.1	24.4	20.9	33.6	24.8	21.1	29.7	24.5	21	25.8	24	20.9	22.5	21.6		75
80	24.2	22.1	19.9	32.2	23.5	20.5	32.1	23.9	20.7	28.2	23.7	20.6	24.8	23.2	20.6	21.6	20.7	19.7	80
85	22.7	21.3	19.7	30.4	22.8	20.2	30.5	23.1	20.4	26.9	23	20.3	23.7	22.5	20.2	20.6	20	19	85
90	21.4	20.5	19.4	28.8	22	19.9	29	22.4	20.1	25.7	22.3	20.1	22.7	21.7	20	19.7	19.2	18.3	90
95	20.2	19.7	19.1	27.2	21.4	19.6	27.6	21.8	19.8	24.5	21.7	19.8	21.7	20.9	19.7	18.9	18.5	17.7	95
100	19.1	18.8	18.8	25.8	20.8	19.4	26.4	21.2	19.6	23.3	21.2	19.6	20.8	20.2	19.3	18.1	17.8	17.1	100
105	18.1	17.8	17.9	24.5	20.2	19.2	25.1	20.6	19.4	22.3	20.6	19.4	19.9	19.4	18.7	17.2	17.1	16.5	105
110	17.1	16.9	17.1	23.2	19.7	19.1	23.9	20.1	19.2	21.3	20.1	19.3	19	18.7	18.1	16.5	16.4	16	110
115	16.2	16.1	16.3	22.1	19.3	19	22.9	19.7	19.1	20.3	19.5	19	18.2	18	17.5	15.7	15.8	15.5	115
120	15.4	15.3	15.5	21	18.8	18.9	21.8	19.2	19	19.4	18.9	18.6	17.5	17.3	16.9	15	15.1	14.9	120
125	14.6	14.6	14.8	20	18.5	18.9	20.8	18.8	19	18.6	18.3	18.1	16.7	16.6	16.4	14.4	14.4	14.4	125
130	13.9	13.9	14.1	19.1	18.1	18.8	19.8	18.5	18.9	17.8	17.7	17.6	16	15.9	15.8	13.7	13.8	13.8	130
135	13.2	13.3	13.5	18.2	17.8	18.3	18.3	18.2	18.6	17	17	16.9	15.4	15.3	15.2	13.1	13.2	13.3	135
140	12.5	12.6	12.9	17.4	17.4	17.6	16.8	17.7	18.2	16.3	16.3	16.3	14.7	14.7	14.7	12.5	12.6	12.7	140
145	12	12.1		16.6	16.7	16.9	15.5	16.5	17.3	15.6	15.6	15.7	14.1	14.1	14.1	11.9	12.1	12.2	145
150	11.4	11.5		15.7	16	16.2	14.3	15.2	15.8	14.5	15	15.1	13.6	13.5	13.6	11.4	11.5	11.7	150
155	11			14.6	15.2	15.4	13.6	14	14.5	13.4	14.2	14.5	13	13	13.1	10.9	11	11.2	155
160	9.9			13.5	14		13	13.1	13.3	12.3	13.2	13.7	12.5	12.5	12.6	10.4	10.5	10.7	160
165				12.6	12.9		12.4	12.6	12.7	11.4	12.1	12.6	11.8	12.1	12.1	10	10.1	10.3	165
170				10.9	11.6		11.7	12	12.2	10.9	11.1	11.5	10.9	11.5	11.7	9.5	9.7	9.8	170
175				5.4			10.9	11.3		10.5	10.6	10.7	10	10.7	11.2	9.2	9.3	9.4	175
180							10	9.3		10	10.2	10.3	9.3	9.8	10.3	8.8	8.9	9.1	180
185							8.5	9		9.7	9.8		8.6	9.1	9.4	8.4	8.6	8.7	185
190										9.1	9.4		8	8.4	8.7	7.8	8.2	8.4	190
195										8.3			7.4	7.8	8	7.2	7.7	8	195
200										5.4			6.9	7.2	7.3	6.6	7.1	7.3	200
205													6.4	6.6	6.6	6.1	6.5	6.7	205
210													5.3	6		5.6	6	6	210
215													2.2			5.1	5.4		215
220																4.6			220
225																2.5			225

t_242_01000_00_000

Lifting capacities
Forces de levage

TNZK

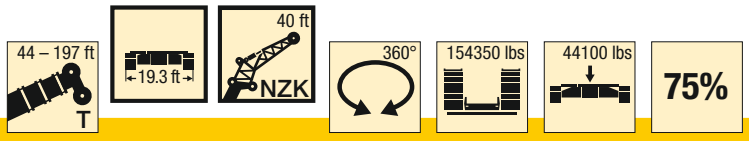

ft	44 ft			58 ft			72 ft			86 ft			100 ft			114 ft			ft
	40 ft			40 ft			40 ft			40 ft			40 ft			40 ft			
	0°	22.5°	45°	0°	22.5°	45°	0°	22.5°	45°	0°	22.5°	45°	0°	22.5°	45°	0°	22.5°	45°	
10	46.1																		10
11	46.1			46.1															11
12	46.1			46.1															12
13	46.1			46.1			46.1												13
14	46.1			46.1			46.1												14
15	46.1			46.1			46.1												15
16	46.1			46.1			46.1			46.1									16
17	46.1			46.1			46.1			46.1									17
18	46.1			46.1			46.1			46.1									18
19	46.1			46.1			46.1			46.1			46.1						19
20	46.1			46.1			46.1			46.1			46.1						20
22	46.1			46.1			46.1			46.1			46.1						22
24	46.1	36.8		46.1			46.1			46.1			46.1			46.1			24
26	46.1	35		46.1	36.6		46.1			46.1			46.1			46.1			26
28	46.1	33.3		46.1	35.1		46.1			46.1			46.1			46.1			28
30	45.7	31.8		46.1	33.7		46.1	34.5		46.1			46.1			46.1			30
32	44.4	30.5		46.1	32.4		46.1	33.3		46.1			46.1			46.1			32
34	42.9	29.3	23.2	46.1	31.2		46.1	32.2		46.1	33.2		46			45.8			34
36	41.4	28.2	23.2	45.9	30.1	23.2	46	31.2		46.1	32.2		45.3	32.6		45.3			36
38	39.5	27.2	23.1	44.7	29.1	23.2	45.8	30.2		45.6	31.3		44.5	31.7		44.5			38
40	37.3	26.2	22.7	43	28.2	23.2	44.5	29.3	23.2	45.1	30.4		43.2	30.9		43.5	31.5		40
45	32.5	24.1	21.5	38.5	26	22.3	40.7	27.3	22.7	43.2	28.4		39.6	29		40.3	29.7		45
50	28.7	22.3	20.5	34.3	24.3	21.3	37.2	25.6	21.8	39.9	26.7	22.3	36.3	27.4	22.6	37.4	28.1		50
55	25.6	20.8	19.8	30.8	22.7	20.5	33.9	24.1	21.1	36.9	25.3	21.6	33.5	26	21.8	34.8	26.6	22.1	55
60	23.2	19.5	19.2	27.8	21.4	19.9	31.2	22.8	20.4	34.2	23.9	20.9	31	24.7	21.2	32.4	25.4	21.5	60
65	21	18.5	19	25.3	20.2	19.4	28.8	21.6	19.9	31.8	22.8	20.4	28.9	23.5	20.7	30.3	24.3	21	65
70	19.2	17.6	10.4	23.3	19.2	19.1	26.6	20.6	19.5	29.5	21.8	19.9	26.8	22.5	20.2	28.5	23.3	20.5	70
75	17.6	17.4		21.4	18.4	19	24.7	19.7	19.1	27.5	20.9	19.5	25.1	21.7	19.8	26.8	22.4	20.1	75
80				19.8	17.7		22.9	18.9	19	25.7	20.1	19.2	23.4	20.8	19.5	25.2	21.6	19.8	80
85				18.5	17.3		21.4	18.3	18.9	24.2	19.3	19.1	22	20.1	19.3	23.8	20.9	19.5	85
90				17.3			20.1	17.7	18.9	22.7	18.7	19	20.6	19.4	19	22.4	20.2	19.3	90
95							18.9	17.4		21.4	18.2	19	19.4	18.8	18.7	21.2	19.7	19.1	95
100							17.9	17.3		20.2	17.7	19	18.3	18	18.1	20.1	19	18.9	100
105										19.2	17.4	19	17.3	17.1	17.3	19.1	18.4	18.3	105
110										18.3	17.3		16.3	16.2	16.5	18.1	17.7	17.6	110
115										17.5			15.5	15.4	15.7	17.3	16.9	17	115
120													14.7	14.7		16.5	16.2	16.4	120
125													14.1	14.1		15.7	15.6	15.8	125
130													13.5			15.1	15	15.2	130
135																14.5	14.4		135
140																14			140
145																13.5			145

t_242_01010_00_000

Lifting capacities
Forces de levage

TNZK

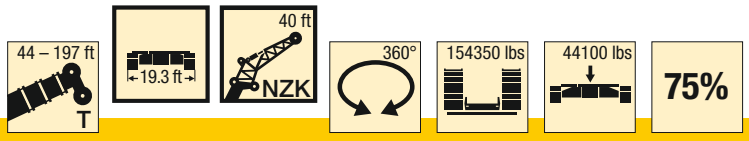

ft	128 ft			142 ft			156 ft			171 ft			185 ft			197 ft			ft
	40 ft			40 ft			40 ft			40 ft			40 ft			40 ft			
	0°	22.5°	45°	0°	22.5°	45°	0°	22.5°	45°	0°	22.5°	45°	0°	22.5°	45°	0°	22.5°	45°	
30	42.6			45.3															30
32	42.4			45.1															32
34	42.2			44.9															34
36	41.9			44.6			40.4												36
38	41.7			44.3			40.2												38
40	41.2			44			40			34.7									40
45	38.8			43			39.3			34.3									45
50	36	28.3		41.8	30.5		38.6			33.9			28.5						50
55	33.6	27	22.2	40.6	29		37.8	29.3		33.5			28			24			55
60	31.4	25.7	21.7	39.4	27.6	22.3	37	27.9	22.6	32.9	27.6		27.6			23.6			60
65	29.3	24.7	21.1	37.8	26.4	21.8	36.1	26.8	22	32.1	26.5		27.3			23.2	22.2		65
70	27.4	23.7	20.7	36	25.3	21.3	34.9	25.7	21.5	31	25.5	21.5	26.8	24.8		22.9	22		70
75	25.7	22.9	20.3	34.1	24.4	20.9	33.6	24.8	21.1	29.7	24.5	21	25.8	24	20.9	22.5	21.6		75
80	24.2	22.1	19.9	32.2	23.5	20.5	32.1	23.9	20.7	28.2	23.7	20.6	24.8	23.2	20.6	21.6	20.7	19.7	80
85	22.7	21.3	19.7	30.4	22.8	20.2	30.5	23.1	20.4	26.9	23	20.3	23.7	22.5	20.2	20.6	20	19	85
90	21.4	20.5	19.4	28.8	22	19.9	29	22.4	20.1	25.7	22.3	20.1	22.7	21.7	20	19.7	19.2	18.3	90
95	20.2	19.7	19.1	27.2	21.4	19.6	27.3	21.8	19.8	24.5	21.7	19.8	21.7	20.9	19.7	18.9	18.5	17.7	95
100	19.1	18.8	18.8	25.8	20.8	19.4	25.4	21.2	19.6	23.3	21.2	19.6	20.8	20.2	19.3	18.1	17.8	17.1	100
105	18.1	17.8	17.9	24.5	20.2	19.2	23.3	20.6	19.4	22.3	20.6	19.4	19.9	19.4	18.7	17.2	17.1	16.5	105
110	17.1	16.9	17.1	22.6	19.7	19.1	21.3	20.1	19.2	21.2	20.1	19.3	19	18.7	18.1	16.5	16.4	16	110
115	16.2	16.1	16.3	20.8	19.3	19	19.9	19.7	19.1	19.6	19.5	19	18.2	18	17.5	15.7	15.8	15.5	115
120	15.4	15.3	15.5	19.1	18.8	18.9	18.9	19	19	18	18.9	18.6	17.5	17.3	16.9	15	15.1	14.9	120
125	14.6	14.6	14.8	17.5	18.4	18.9	17.7	17.9	18.7	16.4	17.8	18.1	16.7	16.6	16.4	14.4	14.4	14.4	125
130	13.9	13.9	14.1	16.1	17.2	18	16.3	17.1	17.2	15.7	16.4	17.3	15.5	15.9	15.8	13.7	13.8	13.8	130
135	13.2	13.3	13.5	14.8	15.8	16.5	15	16.1	16.5	14.9	15	16	14.2	15.3	15.2	13.1	13.2	13.3	135
140	12.5	12.6	12.9	13.8	14.5	15.1	13.8	14.8	15.6	14.2	14.3	14.6	13	14.2	14.7	12.4	12.6	12.7	140
145	12	12.1		13.2	13.3	13.8	12.7	13.6	14.3	13.1	13.7	13.8	11.9	13	13.9	11.6	12.1	12.2	145
150	11.4	11.5		12.7	12.7	12.9	12.1	12.5	13.1	12.1	13	13.2	10.8	11.9	12.8	10.6	11.5	11.7	150
155	11			12.2	12.2	12.4	11.5	11.7	11.9	11.1	12	12.5	9.9	10.9	11.7	9.7	10.7	11.2	155
160	9.9			11.7	11.8		10.9	11.1	11.3	10.2	11	11.6	8.9	9.9	10.6	8.8	9.7	10.6	160
165				11.3	11.4		10.3	10.6	10.8	9.4	10.1	10.5	8.1	9	9.6	7.9	8.8	9.6	165
170				10.8	11		9.6	10	10.2	8.6	9.2	9.6	7.3	8.1	8.7	7.1	8	8.7	170
175				5.4			8.9	9.3		7.9	8.4	8.7	6.6	7.3	7.8	6.4	7.2	7.8	175
180							8.2	8.5		7.2	7.7	7.9	5.9	6.6	7	5.7	6.4	7	180
185							7.6	7.8		6.5	7		5.3	5.8	6.2	5	5.7	6.2	185
190										6	6.3		4.7	5.2	5.4	4.4	5	5.5	190
195										5.4			4.1	4.5	4.7	3.9	4.4	4.8	195
200										4.9			3.6	3.9	4	3.3	3.8	4.1	200
205													3.1	3.4	3.3	2.8	3.2	3.4	205
210													2.6	2.8		2.3	2.7	2.8	210
215													2.1			1.9	2.2		215
220																1.4			220

t_242_01010_00_000

Lifting capacities
Forces de levage

TNZK

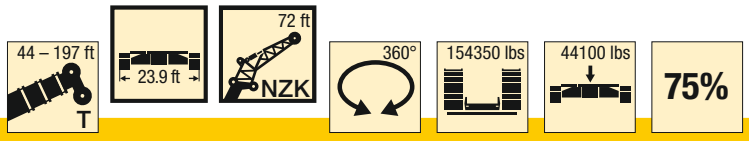

ft	44 ft			58 ft			72 ft			86 ft			100 ft			114 ft			ft
	72 ft			72 ft			72 ft			72 ft			72 ft			72 ft			
	0°	22.5°	45°	0°	22.5°	45°	0°	22.5°	45°	0°	22.5°	45°	0°	22.5°	45°	0°	22.5°	45°	
12	21.8																		12
13	22																		13
14	22.2																		14
15	22.2																		15
16	22.2			21.5															16
17	22.1			21.5															17
18	22.1			21.5															18
19	22			21.5			20.5												19
20	21.9			21.4			20.5												20
22	21.7			21.3			20.5			19.9									22
24	21.6			21.2			20.4			19.9									24
26	21.3			21			20.3			19.8			19						26
28	21.1			20.8			20.2			19.7			18.9						28
30	20.9			20.7			20			19.6			18.9			18.3			30
32	20.6			20.5			19.9			19.5			18.8			18.3			32
34	20.3			20.3			19.7			19.4			18.7			18.2			34
36	20			20			19.5			19.2			18.6			18.1			36
38	19.7			19.7			19.3			19.1			18.4			18			38
40	19.3	16.6		19.5			19.1			18.9			18.3			17.9			40
45	18.4	15.7		18.7	15.8		18.5			18.4			17.9			17.5			45
50	17.5	14.9		17.9	15.1		17.9			17.8			17.4			17.2			50
55	16.5	14.1		17.2	14.4		17.3	14.4		17.3	14.4		17			16.8			55
60	15.6	13.3	11.3	16.4	13.7		16.6	13.8		16.8	13.9		16.6	13.8		16.4	13.8		60
65	14.7	12.7	10.9	15.6	13.1	11	16	13.3	11	16.2	13.4		16.1	13.4		16	13.3		65
70	13.9	12.1	10.5	14.8	12.5	10.7	15.3	12.7	10.7	15.7	12.9		15.6	12.9		15.6	13		70
75	13.1	11.6	10.3	14.1	12	10.4	14.7	12.3	10.4	15.1	12.5	10.5	15.2	12.5	10.4	15.2	12.6		75
80	12.4	11.1	10	13.4	11.6	10.1	14	11.9	10.2	14.6	12.1	10.2	14.7	12.2	10.2	14.8	12.2	10.2	80
85	11.6	10.7	9.8	12.7	11.2	9.9	13.4	11.5	10	14	11.7	10.1	14.2	11.8	10.1	14.4	11.9	10	85
90	10.8	10.3	9.7	12.1	10.8	9.8	12.8	11.1	9.8	13.4	11.4	9.9	13.7	11.5	9.9	14	11.6	9.9	90
95	10.1	10	9.7	11.5	10.4	9.7	12.3	10.8	9.7	12.9	11.1	9.8	13.3	11.2	9.8	13.6	11.3	9.8	95
100	9.4	9.8	9.7	10.9	10.2	9.7	11.8	10.5	9.6	12.5	10.8	9.7	12.8	10.9	9.7	13.1	11.1	9.7	100
105	8.9	9.7		10.2	9.9	9.7	11.3	10.2	9.6	12	10.5	9.6	12.4	10.6	9.6	12.7	10.8	9.6	105
110				9.6	9.8	9.7	10.8	10	9.6	11.6	10.3	9.6	12	10.4	9.5	12.4	10.6	9.5	110
115				9.2	9.7		10.2	9.8	9.6	11.1	10	9.6	11.6	10.2	9.5	12	10.4	9.5	115
120				8.8	9.7		9.7	9.7	9.6	10.7	9.9	9.6	11.2	10	9.5	11.6	10.2	9.4	120
125							9.3	9.6	9.6	10.3	9.7	9.6	10.9	9.9	9.5	11.3	10	9.4	125
130							9	9.6		9.8	9.6	9.6	10.5	9.7	9.5	11	9.8	9.4	130
135							8.6	9.6		9.4	9.6	9.6	10.1	9.6	9.5	10.7	9.7	9.4	135
140										9.1	9.6	9.6	9.8	9.5	9.5	10.4	9.6	9.4	140
145										8.8	9.6		9.5	9.5	9.5	10.1	9.5	9.4	145
150										8.6			9.2	9.5	9.5	9.8	9.5	9.4	150
155													8.9	9.2		9.5	9.4	9.4	155
160													8.7	9.1		9.2	9.4	9.4	160
165																9	9.3	9.4	165
170																8.8	9.2		170
175																8.6	9.1		175

t_242_03000_00_000

Lifting capacities
Forces de levage

TNZK

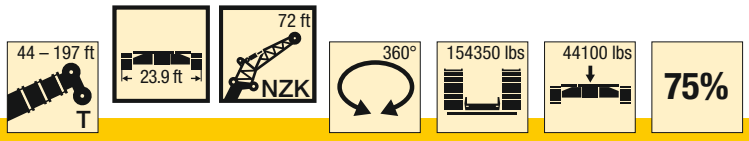

ft	128 ft			142 ft			156 ft			171 ft			185 ft			197 ft			ft
	72 ft			72 ft			72 ft			72 ft			72 ft			72 ft			
	0°	22.5°	45°	0°	22.5°	45°	0°	22.5°	45°	0°	22.5°	45°	0°	22.5°	45°	0°	22.5°	45°	
32	17.5			18.2															32
34	17.5			18.2															34
36	17.4			18.1															36
38	17.3			18															38
40	17.2			17.9			17.2												40
45	16.9			17.6			16.9			15.8									45
50	16.6			17.3			16.7			15.6									50
55	16.3			17			16.4			15.4			14.1			13			55
60	16			16.7			16.2			15.2			13.9			12.8			60
65	15.7	13.2		16.4	13.7		15.9			14.9			13.8			12.7			65
70	15.3	12.8		16	13.3		15.6			14.7			13.6			12.5			70
75	15	12.5		15.7	13		15.3	12.8		14.5	12.4		13.4			12.4			75
80	14.6	12.2		15.4	12.6		15	12.5		14.3	12.1		13.2	11.5		12.2			80
85	14.3	11.9	10	15	12.3	10.2	14.7	12.2	10.1	14	11.8		13	11.3		12	10.8		85
90	13.9	11.6	9.9	14.7	12	10	14.4	12	10	13.7	11.6		12.8	11.1		11.9	10.6		90
95	13.6	11.3	9.8	14.3	11.8	9.9	14.1	11.7	9.8	13.5	11.4	9.7	12.6	10.9		11.7	10.5		95
100	13.2	11.1	9.6	13.9	11.5	9.8	13.8	11.4	9.7	13.2	11.2	9.6	12.4	10.7	9.4	11.6	10.3		100
105	12.8	10.8	9.6	13.6	11.3	9.7	13.4	11.2	9.6	12.9	11	9.5	12.2	10.6	9.3	11.4	10.2	9.2	105
110	12.4	10.6	9.5	13.2	11	9.6	13.1	11	9.5	12.7	10.8	9.4	12	10.4	9.3	11.2	10	9.1	110
115	12.1	10.4	9.4	12.8	10.8	9.5	12.8	10.8	9.5	12.4	10.6	9.4	11.7	10.2	9.2	11.1	9.9	9.1	115
120	11.8	10.2	9.4	12.5	10.6	9.4	12.5	10.6	9.4	12.1	10.4	9.3	11.5	10.1	9.2	10.9	9.8	9	120
125	11.5	10.1	9.4	12.2	10.4	9.4	12.2	10.4	9.3	11.9	10.3	9.3	11.3	10	9.1	10.8	9.7	9	125
130	11.2	9.9	9.4	11.9	10.2	9.4	11.9	10.2	9.3	11.7	10.1	9.2	11.1	9.8	9.1	10.6	9.5	9	130
135	10.9	9.8	9.4	11.6	10.1	9.3	11.7	10.1	9.3	11.4	10	9.2	11	9.7	9.1	10.4	9.4	8.9	135
140	10.6	9.7	9.4	11.3	9.9	9.3	11.4	9.9	9.2	11.2	9.8	9.2	10.8	9.6	9	10.2	9.3	8.9	140
145	10.3	9.6	9.4	11	9.8	9.3	11.1	9.8	9.2	11	9.7	9.2	10.6	9.5	9	9.9	9.3	8.9	145
150	9.9	9.5	9.4	10.8	9.6	9.3	10.9	9.7	9.2	10.8	9.6	9.2	10.4	9.4	9	9.6	9.2	8.9	150
155	9.5	9.4	9.4	10.5	9.5	9.3	10.7	9.6	9.2	10.6	9.5	9.2	10.2	9.3	9	9.3	9.1	8.9	155
160	9.2	9.2	9.4	10.3	9.5	9.3	10.4	9.5	9.2	10.4	9.4	9.2	10	9.3	9	8.9	8.9	8.9	160
165	8.9	9	9.2	10	9.4	9.3	10.2	9.4	9.2	10.2	9.3	9.2	9.9	9.2	9	8.6	8.8	8.8	165
170	8.5	8.7	8.9	9.8	9.4	9.3	10	9.3	9.2	10	9.3	9.2	9.7	9.1	9	8.4	8.6	8.7	170
175	8.2	8.4	8.6	9.6	9.3	9.3	9.8	9.3	9.2	9.8	9.2	9.2	9.4	9.1	9	8.1	8.3	8.6	175
180	8	8.1	8.5	9.4	9.3	9.3	9.7	9.2	9.2	9.6	9.2	9.2	9.1	9	9	7.8	8.1	8.4	180
185	7.7	7.9		9.2	9.3	9.3	9.3	9.2	9.2	9.3	9.2	9.2	8.8	8.8	9	7.5	7.8	8.1	185
190	7.5			9	9.3	8.6	9	9.2	9.2	8.7	9.1	9.2	8.6	8.6	8.9	7.2	7.5	7.8	190
195				8.8	9.3		8.7	8.9	9.2	8.1	8.9	9.1	8.3	8.4	8.7	7	7.2	7.5	195
200				7.8			8.4	8.6	7.6	7.7	8.3	8.6	7.7	8.2	8.5	6.7	7	7.2	200
205				6.3			8.1	8.4	7.3	7.5	7.7	7.9	7.2	7.9	8.2	6.5	6.7	7	205
210							7.5	8		7.3	7.5	7.6	6.7	7.5	7.8	6.2	6.5	6.7	210
215							6.5			7	7.2	7.4	6.2	6.9	7.1	5.9	6.2	6.4	215
220							3.3			6.8	7		5.7	6.4	6.5	5.5	6	6.2	220
225										6.2	6.7		5.3	5.9	5.9	5	5.7	5.9	225
230										4.3			4.8	5.4	5.2	4.5	5.2	5.4	230
235													4.4	4.9		4.1	4.7	4.8	235
240													3.8			3.7	4.2		240
245																3.3	3.7		245
250																2.9	3.2		250

t_242_03000_00_000

Lifting capacities
Forces de levage

TNZK

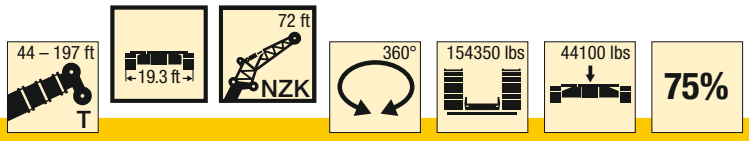

ft	44 ft			58 ft			72 ft			86 ft			100 ft			114 ft			ft
	72 ft			72 ft			72 ft			72 ft			72 ft			72 ft			
	0°	22.5°	45°	0°	22.5°	45°	0°	22.5°	45°	0°	22.5°	45°	0°	22.5°	45°	0°	22.5°	45°	
12	21.8																		12
13	22																		13
14	22.2																		14
15	22.2																		15
16	22.2			21.5															16
17	22.1			21.5															17
18	22.1			21.5															18
19	22			21.5			20.5												19
20	21.9			21.4			20.5												20
22	21.7			21.3			20.5			19.9									22
24	21.6			21.2			20.4			19.9									24
26	21.3			21			20.3			19.8			19						26
28	21.1			20.8			20.2			19.7			18.9						28
30	20.9			20.7			20			19.6			18.9			18.3			30
32	20.6			20.5			19.9			19.5			18.8			18.3			32
34	20.3			20.3			19.7			19.4			18.7			18.2			34
36	20			20			19.5			19.2			18.6			18.1			36
38	19.7			19.7			19.3			19.1			18.4			18			38
40	19.3	16.6		19.5			19.1			18.9			18.3			17.9			40
45	18.4	15.7		18.7	15.8		18.5			18.4			17.9			17.5			45
50	17.5	14.9		17.9	15.1		17.9			17.8			17.4			17.2			50
55	16.5	14.1		17.2	14.4		17.3	14.4		17.3	14.4		17			16.8			55
60	15.6	13.3	11.3	16.4	13.7		16.6	13.8		16.8	13.9		16.6	13.8		16.4	13.8		60
65	14.7	12.7	10.9	15.6	13.1	11	16	13.3	11	16.2	13.4		16.1	13.4		16	13.3		65
70	13.9	12.1	10.5	14.8	12.5	10.7	15.3	12.7	10.7	15.7	12.9		15.6	12.9		15.6	13		70
75	13.1	11.6	10.3	14.1	12	10.4	14.7	12.3	10.4	15.1	12.5	10.5	15.2	12.5	10.4	15.2	12.6		75
80	12.4	11.1	10	13.4	11.6	10.1	14	11.9	10.2	14.6	12.1	10.2	14.7	12.2	10.2	14.8	12.2	10.2	80
85	11.6	10.7	9.8	12.7	11.2	9.9	13.4	11.5	10	14	11.7	10.1	14.2	11.8	10.1	14.4	11.9	10	85
90	10.8	10.3	9.7	12.1	10.8	9.8	12.8	11.1	9.8	13.4	11.4	9.9	13.7	11.5	9.9	14	11.6	9.9	90
95	10.1	10	9.7	11.5	10.4	9.7	12.3	10.8	9.7	12.9	11.1	9.8	13.3	11.2	9.8	13.6	11.3	9.8	95
100	9.4	9.8	9.7	10.9	10.2	9.7	11.8	10.5	9.6	12.5	10.8	9.7	12.8	10.9	9.7	13.1	11.1	9.7	100
105	8.9	9.7		10.2	9.9	9.7	11.3	10.2	9.6	12	10.5	9.6	12.4	10.6	9.6	12.7	10.8	9.6	105
110				9.6	9.8	9.7	10.8	10	9.6	11.6	10.3	9.6	12	10.4	9.5	12.4	10.6	9.5	110
115				9.2	9.7		10.2	9.8	9.6	11.1	10	9.6	11.6	10.2	9.5	12	10.4	9.5	115
120				8.8	9.7		9.7	9.7	9.6	10.7	9.9	9.6	11.2	10	9.5	11.6	10.2	9.4	120
125							9.3	9.6	9.6	10.3	9.7	9.6	10.9	9.9	9.5	11.3	10	9.4	125
130							9	9.6		9.8	9.6	9.6	10.5	9.7	9.5	11	9.8	9.4	130
135							8.6	9.6		9.4	9.6	9.6	10.1	9.6	9.5	10.7	9.7	9.4	135
140										9.1	9.6	9.6	9.8	9.5	9.5	10.4	9.6	9.4	140
145										8.8	9.6		9.5	9.5	9.5	10.1	9.5	9.4	145
150										8.6			9.2	9.5	9.5	9.8	9.5	9.4	150
155													8.9	9.2		9.5	9.4	9.4	155
160													8.7	9.1		9.2	9.4	9.4	160
165																9	9.3	9.4	165
170																8.8	9.2		170
175																8.6	9.1		175

t_242_03010_00_000

Lifting capacities
Forces de levage

TNZK

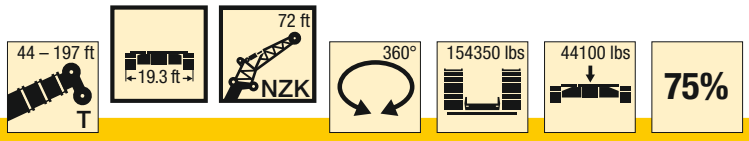

ft	128 ft			142 ft			156 ft			171 ft			185 ft			197 ft			ft
	72 ft			72 ft			72 ft			72 ft			72 ft			72 ft			
	0°	22.5°	45°	0°	22.5°	45°	0°	22.5°	45°	0°	22.5°	45°	0°	22.5°	45°	0°	22.5°	45°	
32	17.5			18.2															32
34	17.5			18.2															34
36	17.4			18.1															36
38	17.3			18															38
40	17.2			17.9			17.2												40
45	16.9			17.6			16.9			15.8									45
50	16.6			17.3			16.7			15.6									50
55	16.3			17			16.4			15.4			14.1			13			55
60	16			16.7			16.2			15.2			13.9			12.8			60
65	15.7	13.2		16.4	13.7		15.9			14.9			13.8			12.7			65
70	15.3	12.8		16	13.3		15.6			14.7			13.6			12.5			70
75	15	12.5		15.7	13		15.3	12.8		14.5	12.4		13.4			12.4			75
80	14.6	12.2		15.4	12.6		15	12.5		14.3	12.1		13.2	11.5		12.2			80
85	14.3	11.9	10	15	12.3	10.2	14.7	12.2	10.1	14	11.8		13	11.3		12	10.8		85
90	13.9	11.6	9.9	14.7	12	10	14.4	12	10	13.7	11.6		12.8	11.1		11.9	10.6		90
95	13.6	11.3	9.8	14.3	11.8	9.9	14.1	11.7	9.8	13.5	11.4	9.7	12.6	10.9		11.7	10.5		95
100	13.2	11.1	9.6	13.9	11.5	9.8	13.8	11.4	9.7	13.2	11.2	9.6	12.4	10.7	9.4	11.6	10.3		100
105	12.8	10.8	9.6	13.6	11.3	9.7	13.4	11.2	9.6	12.9	11	9.5	12.2	10.6	9.3	11.4	10.2	9.2	105
110	12.4	10.6	9.5	13.2	11	9.6	13.1	11	9.5	12.7	10.8	9.4	12	10.4	9.3	11.2	10	9.1	110
115	12.1	10.4	9.4	12.8	10.8	9.5	12.8	10.8	9.5	12.4	10.6	9.4	11.7	10.2	9.2	11.1	9.9	9.1	115
120	11.8	10.2	9.4	12.5	10.6	9.4	12.5	10.6	9.4	12.1	10.4	9.3	11.5	10.1	9.2	10.9	9.8	9	120
125	11.5	10.1	9.4	12.2	10.4	9.4	12.2	10.4	9.3	11.9	10.3	9.3	11.3	10	9.1	10.8	9.7	9	125
130	11.2	9.9	9.4	11.9	10.2	9.4	11.9	10.2	9.3	11.7	10.1	9.2	11.1	9.8	9.1	10.6	9.5	9	130
135	10.9	9.8	9.4	11.6	10.1	9.3	11.7	10.1	9.3	11.4	10	9.2	11	9.7	9.1	10.4	9.4	8.9	135
140	10.6	9.7	9.4	11.3	9.9	9.3	11.4	9.9	9.2	11.2	9.8	9.2	10.8	9.6	9	10.2	9.3	8.9	140
145	10.3	9.6	9.4	11	9.8	9.3	11.1	9.8	9.2	11	9.7	9.2	10.6	9.5	9	9.9	9.3	8.9	145
150	9.9	9.5	9.4	10.8	9.6	9.3	10.9	9.7	9.2	10.8	9.6	9.2	10.4	9.4	9	9.6	9.2	8.9	150
155	9.5	9.4	9.4	10.5	9.5	9.3	10.5	9.6	9.2	10.5	9.5	9.2	10.2	9.3	9	9.3	9.1	8.9	155
160	9.2	9.2	9.4	10.3	9.5	9.3	10.3	9.5	9.2	10	9.4	9.2	9.9	9.3	9	8.9	8.9	8.9	160
165	8.9	9	9.2	10	9.4	9.3	10	9.4	9.2	9.8	9.3	9.2	9.3	9.2	9	8.6	8.8	8.8	165
170	8.5	8.7	8.9	9.5	9.4	9.3	9.5	9.3	9.2	9.5	9.3	9.2	8.5	9.1	9	8.1	8.6	8.7	170
175	8.2	8.4	8.6	8.8	9.3	9.3	8.7	9.3	9.2	9	9.1	9.1	7.8	9.1	9	7.5	8.3	8.6	175
180	8	8.1	8.5	8.6	9	9.2	8.4	9	9.2	8.3	9	9.1	7.1	8.5	9	6.8	8.1	8.4	180
185	7.7	7.9		8.3	8.4	8.7	8.1	8.4	8.8	7.6	8.7	9.1	6.4	7.8	8.6	6.1	7.6	8.1	185
190	7.5			8.1	8.2	8.6	7.8	8	8.2	7	8	8.6	5.7	7	7.8	5.5	6.9	7.6	190
195				7.8	7.9		7.4	7.7	7.9	6.4	7.4	7.8	5.2	6.4	7	4.9	6.2	7	195
200				7.6			6.8	7.4	7.5	5.8	6.7	7	4.6	5.7	6.2	4.3	5.6	6.2	200
205				6.3			6.3	6.8	6.7	5.3	6.1	6.3	4.1	5.1	5.5	3.8	4.9	5.5	205
210							5.8	6.2		4.8	5.5	5.6	3.6	4.5	4.9	3.3	4.3	4.9	210
215							5.3			4.3	4.9	4.9	3.1	3.9	4.2	2.8	3.8	4.2	215
220							3.3			3.9	4.4		2.6	3.4	3.5	2.3	3.3	3.6	220
225										3.5	3.8		2.2	2.9	2.9	1.9	2.8	3	225
230										3.1			1.8	2.4	2.2	1.4	2.3	2.4	230
235													1.4	1.9			1.8	1.8	235

t_242_03010_00_000

Lifting heights
Hauteurs de levage

TNZK

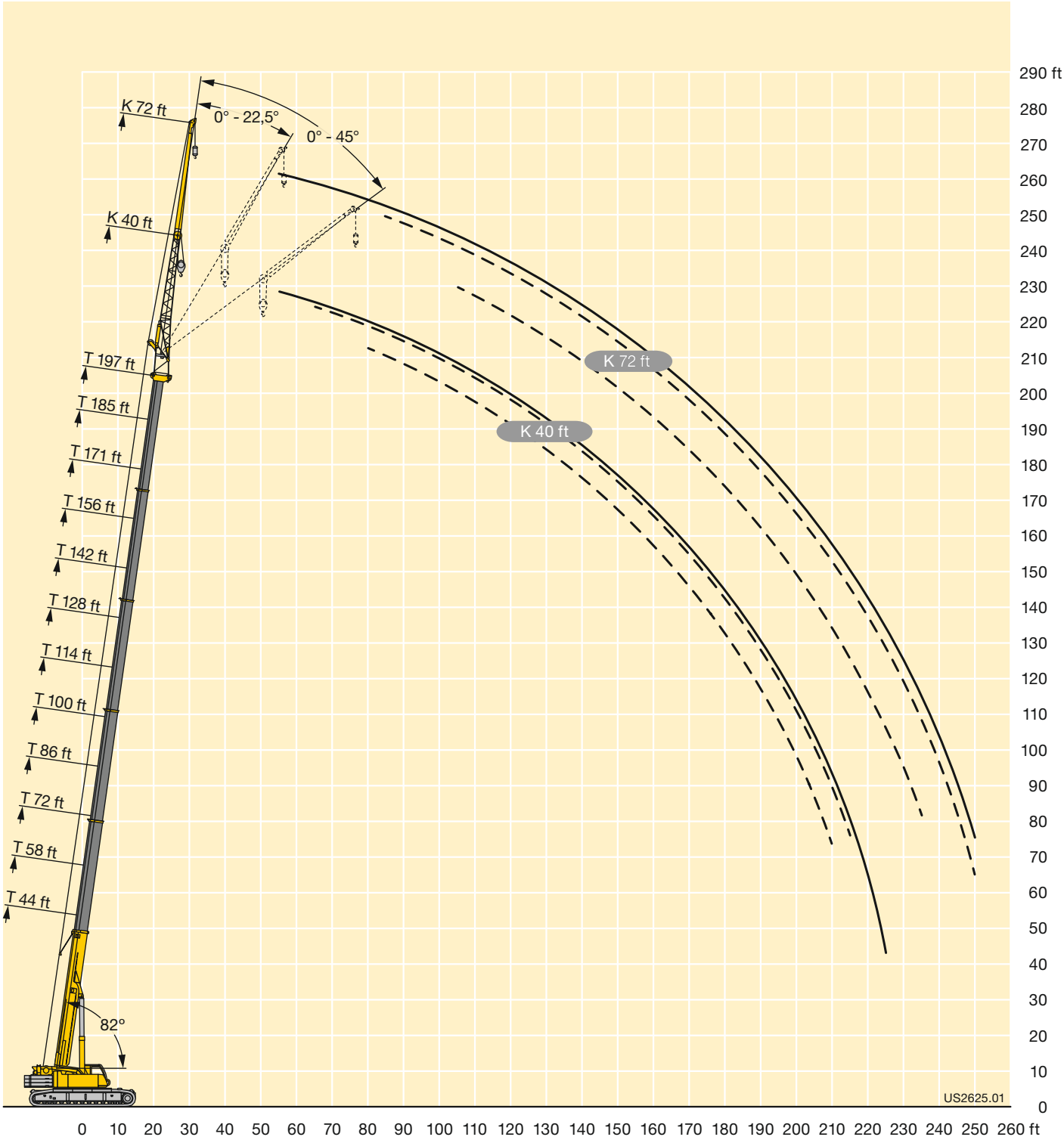

Lifting capacities
Forces de levage

TNZK

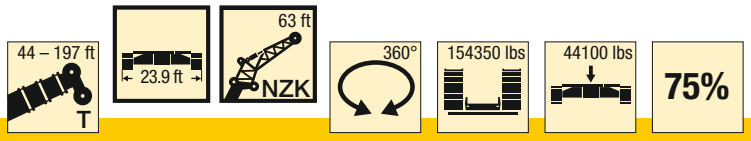

ft	44 ft			58 ft			72 ft			86 ft			100 ft			114 ft			ft
	63 ft			63 ft			63 ft			63 ft			63 ft			63 ft			
	0°	22.5°	45°	0°	22.5°	45°	0°	22.5°	45°	0°	22.5°	45°	0°	22.5°	45°	0°	22.5°	45°	
14	43.7																		14
15	43.4			40.7															15
16	43			40.5															16
17	42.7			40.2			36.6												17
18	42.2			40			36.5												18
19	41.8			39.7			36.3												19
20	41.3			39.5			36.2			34.1									20
22	40.3			38.9			35.8			33.9									22
24	39.2			38.3			35.5			33.6			30.9						24
26	38.1			37.5			35.1			33.4			30.7						26
28	37			36.8			34.6			33.1			30.6			29			28
30	35.9			35.9			34.1			32.8			30.4			28.9			30
32	34.8			35.1			33.6			32.5			30.2			28.7			32
34	33.6			34.2			33			32.1			29.9			28.5			34
36	32.4	23.8		33.3			32.4			31.7			29.7			28.3			36
38	31.1	23		32.4			31.7			31.1			29.4			28.1			38
40	29.7	22.2		31.4	22.6		30.9			30.6			29			27.8			40
45	26.3	20.6		28.8	21.1		29.1	21		29.1	21.1		28			27.1			45
50	23	19.1		26.1	19.7		27.1	19.8		27.6	20		26.9	19.7		26.3			50
55	20.6	17.8	15.7	23.4	18.5	15.9	25	18.8		26	19		25.6	18.9		25.4	18.8		55
60	18.5	16.7	15	21.1	17.5	15.2	23	17.8	15.2	24.4	18.1		24.4	18.1		24.4	18.1		60
65	16.7	15.7	14.4	19.2	16.5	14.7	21	16.9	14.7	22.7	17.3	14.8	23.1	17.3	14.7	23.3	17.4		65
70	15.2	14.9	13.8	17.6	15.7	14.2	19.3	16.1	14.3	21.1	16.5	14.4	21.8	16.6	14.3	22.2	16.7		70
75	14	14.1	13.4	16.2	15	13.7	17.9	15.4	13.9	19.5	15.9	14	20.5	16	14	21.2	16.2	14	75
80	12.8	13.4	13.1	14.9	14.3	13.4	16.6	14.8	13.5	18.2	15.3	13.7	19.2	15.4	13.7	20.1	15.6	13.7	80
85	11.8	12.9	12.9	13.8	13.7	13.1	15.4	14.2	13.2	17	14.7	13.4	18	14.9	13.4	19.1	15.1	13.5	85
90	10.9	12.4	12.9	12.8	13.1	12.9	14.4	13.7	13	15.9	14.2	13.1	17	14.4	13.2	18	14.7	13.3	90
95	10.1	12		11.9	12.7	12.8	13.5	13.2	12.8	15	13.7	12.9	16	14	13	17.1	14.2	13	95
100				11.2	12.3	12.8	12.7	12.8	12.7	14.1	13.3	12.8	15.1	13.6	12.8	16.2	13.8	12.9	100
105				10.5	12		11.9	12.5	12.7	13.3	12.9	12.7	14.3	13.2	12.7	15.3	13.4	12.7	105
110				9.9	11.8		11.3	12.2	12.7	12.6	12.6	12.6	13.6	12.9	12.6	14.6	13.1	12.6	110
115							10.7	11.9		11.9	12.3	12.6	12.9	12.6	12.5	13.9	12.8	12.5	115
120							10.1	11.7		11.3	12.1	12.6	12.3	12.2	12.4	13.3	12.6	12.4	120
125							9.7			10.8	11.8	12.6	11.8	11.9	12.1	12.7	12.3	12.4	125
130										10.3	11.6		11.3	11.4	11.7	12.2	12	12.3	130
135										9.9	11.6		10.8	10.9	11.3	11.7	11.7	12	135
140										9.6			10.4	10.5	10.9	11.2	11.4	11.6	140
145													10	10.2		10.8	11	11.3	145
150													9.7	9.9		10.4	10.6	11	150
155													9.5			10.1	10.3		155
160																9.8	10		160
165																9.6			165
170																5.4			170

t_242_02000_00_000

Lifting capacities
Forces de levage

TNZK

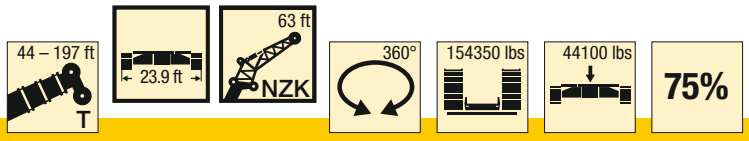

ft	128 ft			142 ft			156 ft			171 ft			185 ft			197 ft			ft
	63 ft			63 ft			63 ft			63 ft			63 ft			63 ft			
	0°	22.5°	45°	0°	22.5°	45°	0°	22.5°	45°	0°	22.5°	45°	0°	22.5°	45°	0°	22.5°	45°	
34	26.5			28.1															34
36	26.3			27.9															36
38	26.1			27.7															38
40	26			27.5			25.5												40
45	25.4			26.9			25			22.2									45
50	24.8			26.3			24.6			21.9									50
55	24.2			25.7			24.1			21.6			18.4						55
60	23.5	17.8		25.1	18.7		23.6			21.2			18.1			15.7			60
65	22.7	17.2		24.4	18.1		23.1			20.9			17.8			15.4			65
70	21.8	16.6		23.6	17.4		22.6	17.2		20.5			17.6			15.2			70
75	21	16.1	14	22.8	16.9		22	16.7		20.1	16		17.3			15			75
80	20.2	15.6	13.7	21.9	16.3	14	21.3	16.2	13.9	19.8	15.6		17.1	14.8		14.8	13.8		80
85	19.4	15.1	13.4	21.1	15.9	13.7	20.6	15.7	13.6	19.3	15.2	13.3	16.8	14.4		14.6	13.7		85
90	18.5	14.7	13.2	20.2	15.4	13.5	19.9	15.3	13.4	18.8	14.8	13.1	16.7	14.1		14.3	13.5		90
95	17.6	14.3	13	19.4	15	13.3	19.3	14.9	13.2	18.3	14.5	13	16.6	13.8	12.6	14.3	13.2		95
100	16.7	13.9	12.8	18.6	14.6	13.1	18.6	14.5	13	17.8	14.1	12.8	16.3	13.6	12.4	14.2	13	12.1	100
105	15.9	13.6	12.7	17.8	14.2	12.9	18	14.2	12.8	17.3	13.8	12.6	16	13.3	12.3	14	12.8	12	105
110	15.1	13.2	12.6	17	13.8	12.8	17.3	13.8	12.7	16.8	13.5	12.5	15.7	13.1	12.2	13.7	12.6	11.9	110
115	14.3	12.9	12.5	16.3	13.5	12.6	16.7	13.5	12.6	16.3	13.3	12.4	15.3	12.8	12.1	13.4	12.4	11.9	115
120	13.6	12.7	12.4	15.6	13.2	12.5	16	13.2	12.4	15.8	13	12.3	14.9	12.6	12	13	12.1	11.8	120
125	12.9	12.4	12.3	14.9	12.9	12.4	15.4	13	12.3	15.3	12.7	12.2	14.4	12.4	12	12.5	11.9	11.7	125
130	12.3	12.1	12.3	14.3	12.7	12.3	14.8	12.7	12.3	14.8	12.5	12.1	13.9	12.2	11.9	11.9	11.7	11.5	130
135	11.7	11.6	11.9	13.7	12.4	12.3	14.3	12.5	12.2	14.3	12.3	12.1	13.4	12	11.8	11.4	11.4	11.2	135
140	11.1	11.2	11.5	13.1	12.2	12.3	13.7	12.3	12.2	13.9	12.1	12	12.8	11.8	11.8	10.9	11	10.9	140
145	10.6	10.6	11	12.7	12	12.3	13.2	12.1	12.1	13.4	11.9	12	12.3	11.6	11.7	10.5	10.6	10.6	145
150	10.1	10.2	10.5	12.2	11.8	12.3	12.8	11.9	12.1	13	11.7	12	11.8	11.4	11.5	10	10.2	10.3	150
155	9.7	9.8	10.1	11.8	11.6	12.3	12.3	11.7	12.1	12.5	11.6	12	11.3	11.2	11.3	9.5	9.8	10	155
160	9.3	9.4	9.7	11.4	11.5	12.3	11.9	11.5	12.1	12.1	11.4	11.9	10.9	10.9	11	9.2	9.4	9.7	160
165	9	9.1	9.4	11	11.3	12.3	11.5	11.4	12.1	11.6	11.2	11.7	10.4	10.5	10.7	8.8	9.1	9.4	165
170	8.6	8.8		10.6	11.2	12.3	10.9	11.2	12.1	10.9	11.1	11.5	10.1	10.1	10.4	8.5	8.7	9.1	170
175	8.4	8.5		10.3	11.1	12.1	10.2	10.9	11.8	10.1	10.8	11.2	9.7	9.8	10.1	8.1	8.4	8.8	175
180	8.1			10.1	11	11.4	9.8	10.2	10.7	9.4	10.4	10.8	9.3	9.5	9.7	7.8	8.1	8.4	180
185				9.8	10.4		9.5	9.6	9.9	8.7	9.6	10.2	8.9	9.2	9.4	7.6	7.8	8.1	185
190				8.9	9.6		9.1	9.3	9.5	8.4	8.9	9.4	8.4	8.9	9.1	7.3	7.5	7.8	190
195				7.7	8.4		8.7	9		8.1	8.3	8.6	7.8	8.6	8.8	7	7.2	7.5	195
200							8.1	8.5		7.8	8	8.2	7.2	7.9	8.4	6.7	7	7.2	200
205							7	7.1		7.6	7.7	7.9	6.7	7.3	7.7	6.4	6.7	7	205
210							4.7			7.3	7.5		6.2	6.8	7.1	5.9	6.4	6.7	210
215										6.8			5.7	6.2	6.4	5.4	6.1	6.4	215
220										5.2			5.2	5.7	5.8	4.9	5.6	5.9	220
225													4.8	5.2	5.1	4.5	5.1	5.3	225
230													4.3	4.7		4	4.5	4.7	230
235													2.4			3.6	4		235
240																3.1	3.5		240
245																2.1			245

t_242_02000_00_000

Lifting capacities
Forces de levage

TNZK

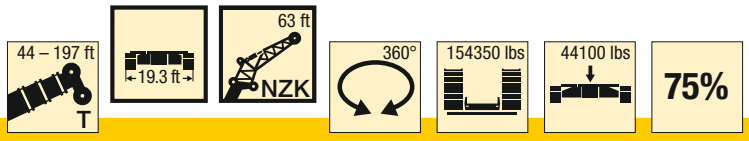

ft	44 ft			58 ft			72 ft			86 ft			100 ft			114 ft			ft
	63 ft			63 ft			63 ft			63 ft			63 ft			63 ft			
	0°	22.5°	45°	0°	22.5°	45°	0°	22.5°	45°	0°	22.5°	45°	0°	22.5°	45°	0°	22.5°	45°	
14	43.7																		14
15	43.4			40.7															15
16	43			40.5															16
17	42.7			40.2			36.6												17
18	42.2			40			36.5												18
19	41.8			39.7			36.3												19
20	41.3			39.5			36.2			34.1									20
22	40.3			38.9			35.8			33.9									22
24	39.2			38.3			35.5			33.6			30.9						24
26	38.1			37.5			35.1			33.4			30.7						26
28	37			36.8			34.6			33.1			30.6			29			28
30	35.9			35.9			34.1			32.8			30.4			28.9			30
32	34.8			35.1			33.6			32.5			30.2			28.7			32
34	33.6			34.2			33			32.1			29.9			28.5			34
36	32.4	23.8		33.3			32.4			31.7			29.7			28.3			36
38	31.1	23		32.4			31.7			31.1			29.4			28.1			38
40	29.7	22.2		31.4	22.6		30.9			30.6			29			27.8			40
45	26.3	20.6		28.8	21.1		29.1	21		29.1	21.1		28			27.1			45
50	23	19.1		26.1	19.7		27.1	19.8		27.6	20		26.9	19.7		26.3			50
55	20.6	17.8	15.7	23.4	18.5	15.9	25	18.8		26	19		25.6	18.9		25.4	18.8		55
60	18.5	16.7	15	21.1	17.5	15.2	23	17.8	15.2	24.4	18.1		24.4	18.1		24.4	18.1		60
65	16.7	15.7	14.4	19.2	16.5	14.7	21	16.9	14.7	22.7	17.3	14.8	23.1	17.3	14.7	23.3	17.4		65
70	15.2	14.9	13.8	17.6	15.7	14.2	19.3	16.1	14.3	21.1	16.5	14.4	21.8	16.6	14.3	22.2	16.7		70
75	14	14.1	13.4	16.2	15	13.7	17.9	15.4	13.9	19.5	15.9	14	20.5	16	14	21.2	16.2	14	75
80	12.8	13.4	13.1	14.9	14.3	13.4	16.6	14.8	13.5	18.2	15.3	13.7	19.2	15.4	13.7	20.1	15.6	13.7	80
85	11.8	12.9	12.9	13.8	13.7	13.1	15.4	14.2	13.2	17	14.7	13.4	18	14.9	13.4	19.1	15.1	13.5	85
90	10.9	12.4	12.9	12.8	13.1	12.9	14.4	13.7	13	15.9	14.2	13.1	17	14.4	13.2	18	14.7	13.3	90
95	10.1	12		11.9	12.7	12.8	13.5	13.2	12.8	15	13.7	12.9	16	14	13	17.1	14.2	13	95
100				11.2	12.3	12.8	12.7	12.8	12.7	14.1	13.3	12.8	15.1	13.6	12.8	16.2	13.8	12.9	100
105				10.5	12		11.9	12.5	12.7	13.3	12.9	12.7	14.3	13.2	12.7	15.3	13.4	12.7	105
110				9.9	11.8		11.3	12.2	12.7	12.6	12.6	12.6	13.6	12.9	12.6	14.6	13.1	12.6	110
115							10.7	11.9		11.9	12.3	12.6	12.9	12.6	12.5	13.9	12.8	12.5	115
120							10.1	11.7		11.3	12.1	12.6	12.3	12.2	12.4	13.3	12.6	12.4	120
125							9.7			10.8	11.8	12.6	11.8	11.9	12.1	12.7	12.3	12.4	125
130										10.3	11.6		11.3	11.4	11.7	12.2	12	12.3	130
135										9.9	11.6		10.8	10.9	11.3	11.7	11.7	12	135
140										9.6			10.4	10.5	10.9	11.2	11.4	11.6	140
145													10	10.2		10.8	11	11.3	145
150													9.7	9.9		10.4	10.6	11	150
155													9.5			10.1	10.3		155
160																9.8	10		160
165																9.6			165
170																5.4			170

t_242_02010_00_000

Lifting capacities
Forces de levage

TNZK

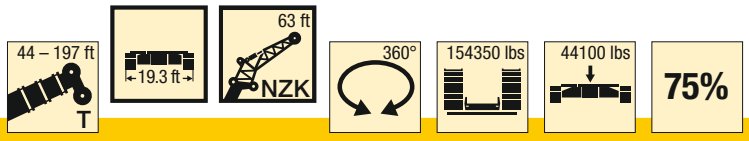

ft	128 ft			142 ft			156 ft			171 ft			185 ft			197 ft			ft
	63 ft			63 ft			63 ft			63 ft			63 ft			63 ft			
	0°	22.5°	45°	0°	22.5°	45°	0°	22.5°	45°	0°	22.5°	45°	0°	22.5°	45°	0°	22.5°	45°	
34	26.5			28.1															34
36	26.3			27.9															36
38	26.1			27.7															38
40	26			27.5			25.5												40
45	25.4			26.9			25			22.2									45
50	24.8			26.3			24.6			21.9									50
55	24.2			25.7			24.1			21.6			18.4						55
60	23.5	17.8		25.1	18.7		23.6			21.2			18.1			15.7			60
65	22.7	17.2		24.4	18.1		23.1			20.9			17.8			15.4			65
70	21.8	16.6		23.6	17.4		22.6	17.2		20.5			17.6			15.2			70
75	21	16.1	14	22.8	16.9		22	16.7		20.1	16		17.3			15			75
80	20.2	15.6	13.7	21.9	16.3	14	21.3	16.2	13.9	19.8	15.6		17.1	14.8		14.8	13.8		80
85	19.4	15.1	13.4	21.1	15.9	13.7	20.6	15.7	13.6	19.3	15.2	13.3	16.8	14.4		14.6	13.7		85
90	18.5	14.7	13.2	20.2	15.4	13.5	19.9	15.3	13.4	18.8	14.8	13.1	16.7	14.1		14.3	13.5		90
95	17.6	14.3	13	19.4	15	13.3	19.3	14.9	13.2	18.3	14.5	13	16.6	13.8	12.6	14.3	13.2		95
100	16.7	13.9	12.8	18.6	14.6	13.1	18.6	14.5	13	17.8	14.1	12.8	16.3	13.6	12.4	14.2	13	12.1	100
105	15.9	13.6	12.7	17.8	14.2	12.9	18	14.2	12.8	17.3	13.8	12.6	16	13.3	12.3	14	12.8	12	105
110	15.1	13.2	12.6	17	13.8	12.8	17.3	13.8	12.7	16.8	13.5	12.5	15.7	13.1	12.2	13.7	12.6	11.9	110
115	14.3	12.9	12.5	16.3	13.5	12.6	16.7	13.5	12.6	16.3	13.3	12.4	15.3	12.8	12.1	13.4	12.4	11.9	115
120	13.6	12.7	12.4	15.6	13.2	12.5	16	13.2	12.4	15.8	13	12.3	14.9	12.6	12	13	12.1	11.8	120
125	12.9	12.4	12.3	14.9	12.9	12.4	15.4	13	12.3	15.3	12.7	12.2	14.4	12.4	12	12.5	11.9	11.7	125
130	12.3	12.1	12.3	14.3	12.7	12.3	14.8	12.7	12.3	14.8	12.5	12.1	13.9	12.2	11.9	11.9	11.7	11.5	130
135	11.7	11.6	11.9	13.7	12.4	12.3	14.1	12.5	12.2	14.2	12.3	12.1	13.4	12	11.8	11.4	11.4	11.2	135
140	11.1	11.2	11.5	13.1	12.2	12.3	13.4	12.3	12.2	13.2	12.1	12	12.8	11.8	11.8	10.9	11	10.9	140
145	10.6	10.6	11	12.7	12	12.3	13	12.1	12.1	12.1	11.9	12	12.3	11.6	11.7	10.5	10.6	10.6	145
150	10.1	10.2	10.5	12.2	11.8	12.3	12.3	11.9	12.1	11.5	11.7	12	11.3	11.4	11.5	10	10.2	10.3	150
155	9.7	9.8	10.1	11.3	11.6	12.3	11.3	11.6	12.1	11	11.4	12	10.4	11.2	11.3	9.5	9.8	10	155
160	9.3	9.4	9.7	10.4	11.4	12.1	10.4	11.3	12	10.6	10.7	11.7	9.5	10.9	11	9.1	9.4	9.7	160
165	9	9.1	9.4	9.7	10.6	11.2	9.6	10.8	11.6	9.9	10.3	10.8	8.6	10.1	10.7	8.3	9.1	9.4	165
170	8.6	8.8		9.4	9.7	10.2	9.1	9.9	10.6	9.1	9.9	10.2	7.8	9.2	10.3	7.6	8.7	9.1	170
175	8.4	8.5		9.1	9.1	9.4	8.7	9.1	9.7	8.3	9.4	9.8	7.1	8.4	9.4	6.8	8.2	8.8	175
180	8.1			8.8	8.9	9.2	8.4	8.6	8.9	7.6	8.7	9.4	6.4	7.6	8.5	6.1	7.4	8.3	180
185				8.5	8.6		8	8.3	8.5	7	7.9	8.5	5.7	6.9	7.7	5.5	6.7	7.7	185
190				8.3	8.4		7.4	7.9	8.2	6.4	7.2	7.7	5.1	6.2	6.9	4.8	6	6.9	190
195				7.7	8.2		6.8	7.4		5.8	6.6	6.9	4.5	5.5	6.1	4.2	5.3	6.1	195
200							6.3	6.7		5.2	5.9	6.2	4	4.9	5.4	3.7	4.7	5.4	200
205							5.8	6.1		4.7	5.3	5.4	3.5	4.3	4.7	3.2	4.1	4.7	205
210							4.7			4.3	4.7		3	3.7	4	2.7	3.5	4.1	210
215										3.8			2.5	3.1	3.4	2.2	3	3.4	215
220										3.4			2.1	2.6	2.7	1.7	2.5	2.8	220
225													1.7	2.1	2		2	2.2	225
230														1.7			1.4	1.6	230

t_242_02010_00_000

Lifting capacities
Forces de levage

TNZK

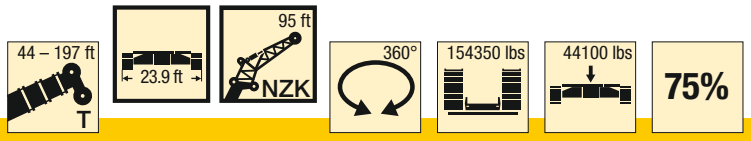

ft	44 ft			58 ft			72 ft			86 ft			100 ft			114 ft			ft
	95 ft			95 ft			95 ft			95 ft			95 ft			95 ft			
	0°	22.5°	45°	0°	22.5°	45°	0°	22.5°	45°	0°	22.5°	45°	0°	22.5°	45°	0°	22.5°	45°	
19	17.3			16.6															19
20	17.3			16.6															20
22	17.2			16.6			15.7												22
24	17.2			16.6			15.7												24
26	17.1			16.6			15.7			15.1									26
28	17			16.5			15.7			15.1			14.3						28
30	16.9			16.4			15.6			15.1			14.3						30
32	16.8			16.4			15.6			15			14.2			13.7			32
34	16.7			16.3			15.5			15			14.2			13.7			34
36	16.5			16.2			15.4			14.9			14.1			13.6			36
38	16.3			16			15.3			14.8			14.1			13.6			38
40	16.1			15.8			15.2			14.8			14			13.5			40
45	15.3			15.3			14.8			14.5			13.9			13.4			45
50	14.5			14.6			14.3			14.1			13.6			13.2			50
55	13.7	11.2		14			13.8			13.7			13.3			13			55
60	12.8	10.5		13.2	10.5		13.2			13.2			12.9			12.7			60
65	12	9.8		12.5	10		12.6	9.9		12.7	9.9		12.4			12.3			65
70	11.2	9.3		11.8	9.5		12	9.5		12.2	9.5		12			11.9			70
75	10.4	8.9		11.1	9.1		11.4	9.1		11.7	9.2		11.6	9.1		11.6	9.1		75
80	9.8	8.4	7.3	10.4	8.7		10.8	8.7		11.1	8.8		11.1	8.8		11.2	8.8		80
85	9.2	8	7	9.8	8.3	7	10.2	8.4	7	10.6	8.5		10.7	8.5		10.8	8.6		85
90	8.6	7.7	6.7	9.3	8	6.8	9.8	8.1	6.8	10.1	8.2		10.3	8.3		10.4	8.3		90
95	8.1	7.4	6.6	8.8	7.6	6.6	9.3	7.8	6.7	9.7	8	6.7	9.8	8	6.7	10	8		95
100	7.6	7.1	6.4	8.4	7.4	6.5	8.9	7.5	6.5	9.3	7.7	6.5	9.4	7.8	6.5	9.6	7.8	6.5	100
105	7.1	6.8	6.2	7.9	7.1	6.3	8.5	7.3	6.4	8.9	7.4	6.4	9.1	7.5	6.4	9.3	7.6	6.4	105
110	6.7	6.6	6.1	7.5	6.9	6.2	8.1	7.1	6.2	8.5	7.2	6.3	8.8	7.3	6.3	9	7.4	6.3	110
115	6.3	6.4	6	7.1	6.7	6.1	7.7	6.9	6.1	8.2	7	6.2	8.4	7.1	6.2	8.7	7.2	6.2	115
120	6	6.2	6	6.7	6.5	6	7.4	6.7	6	7.9	6.9	6.1	8.2	7	6.1	8.4	7	6.1	120
125	5.7	6.1		6.4	6.3	6	7	6.5	6	7.6	6.7	6	7.9	6.8	6	8.2	6.9	6	125
130	5.4	6.1		6.1	6.1	6	6.7	6.3	5.9	7.3	6.5	6	7.7	6.6	5.9	7.9	6.7	6	130
135				5.8	6	6	6.4	6.2	5.9	7	6.4	5.9	7.4	6.5	5.9	7.7	6.6	5.9	135
140				5.6	6		6.1	6.1	5.9	6.7	6.2	5.9	7.1	6.3	5.8	7.4	6.5	5.9	140
145				5.4			5.9	6	5.9	6.4	6.1	5.9	6.9	6.2	5.8	7.2	6.3	5.8	145
150							5.7	6		6.2	6	5.9	6.6	6.1	5.8	7	6.2	5.8	150
155							5.5			6	5.9	5.9	6.4	6	5.8	6.8	6.1	5.8	155
160										5.8	5.9	5.9	6.2	5.9	5.8	6.6	6	5.8	160
165										5.6	5.9		6	5.9	5.8	6.4	5.9	5.8	165
170										5.4			5.8	5.8	5.8	6.2	5.9	5.8	170
175													5.6	5.8	5.8	6	5.8	5.8	175
180													5.5			5.8	5.8	5.8	180
185													5.4			5.7	5.8	5.8	185
190																5.5	5.8		190
195																5.4	5.8		195
200																5.3			200

t_242_05000_00_000

Lifting capacities
Forces de levage

TNZK

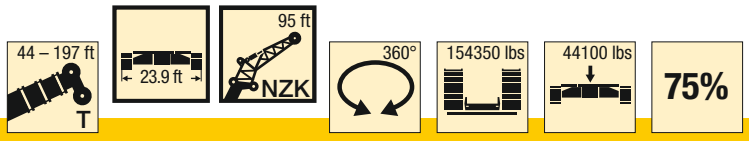

ft	128 ft			142 ft			156 ft			171 ft			185 ft			197 ft			ft
	95 ft			95 ft			95 ft			95 ft			95 ft			95 ft			
	0°	22.5°	45°	0°	22.5°	45°	0°	22.5°	45°	0°	22.5°	45°	0°	22.5°	45°	0°	22.5°	45°	
36	12.9																		36
38	12.9			13.5															38
40	12.8			13.4															40
45	12.7			13.3			12.6												45
50	12.6			13.2			12.5												50
55	12.4			13			12.4			11.4			10.2						55
60	12.2			12.9			12.3			11.3			10.1			9.2			60
65	11.9			12.6			12.1			11.2			10			9.1			65
70	11.6			12.3			11.9			11			9.9			9			70
75	11.3			12			11.6			10.8			9.8			8.9			75
80	11	8.7		11.7	9		11.3			10.6			9.7			8.8			80
85	10.6	8.5		11.3	8.8		11	8.7		10.4			9.5			8.7			85
90	10.3	8.3		11	8.6		10.8	8.5		10.2			9.3			8.7			90
95	9.9	8		10.6	8.3		10.5	8.3		9.9	8		9.2	7.7		8.6			95
100	9.6	7.8		10.3	8.1		10.1	8.1		9.6	7.8		9	7.5		8.4	7.3		100
105	9.3	7.6	6.4	10	7.9	6.5	9.8	7.8	6.4	9.4	7.7		8.8	7.4		8.3	7.1		105
110	9	7.4	6.3	9.6	7.7	6.4	9.6	7.7	6.3	9.2	7.5		8.7	7.2		8.2	7		110
115	8.7	7.2	6.2	9.3	7.5	6.3	9.3	7.5	6.2	8.9	7.3	6.2	8.5	7.1		8.1	6.9		115
120	8.5	7.1	6.1	9.1	7.3	6.2	9	7.3	6.2	8.7	7.2	6.1	8.3	7	6	7.9	6.8		120
125	8.3	6.9	6	8.8	7.2	6.1	8.8	7.2	6.1	8.5	7	6	8.2	6.8	5.9	7.8	6.6	5.8	125
130	8	6.8	5.9	8.5	7	6	8.5	7	6	8.3	6.9	5.9	8	6.7	5.8	7.6	6.5	5.7	130
135	7.8	6.6	5.9	8.3	6.9	6	8.3	6.9	5.9	8.2	6.8	5.8	7.8	6.6	5.8	7.5	6.4	5.7	135
140	7.6	6.5	5.8	8.1	6.7	5.9	8.1	6.7	5.9	8	6.7	5.8	7.6	6.5	5.7	7.4	6.3	5.6	140
145	7.4	6.4	5.8	7.8	6.6	5.8	7.9	6.6	5.8	7.8	6.5	5.8	7.5	6.4	5.7	7.3	6.2	5.6	145
150	7.2	6.3	5.8	7.6	6.5	5.8	7.7	6.5	5.8	7.6	6.4	5.7	7.4	6.3	5.6	7.1	6.2	5.5	150
155	7	6.2	5.7	7.4	6.4	5.8	7.5	6.4	5.7	7.4	6.3	5.7	7.2	6.2	5.6	7	6.1	5.5	155
160	6.8	6.1	5.7	7.2	6.2	5.7	7.3	6.3	5.7	7.3	6.2	5.6	7.1	6.1	5.5	6.9	6	5.5	160
165	6.7	6	5.7	7	6.2	5.7	7.2	6.2	5.7	7.1	6.1	5.6	6.9	6	5.5	6.8	5.9	5.5	165
170	6.5	5.9	5.7	6.9	6.1	5.7	7	6.1	5.6	7	6.1	5.6	6.8	6	5.5	6.6	5.8	5.4	170
175	6.3	5.8	5.7	6.7	6	5.7	6.8	6	5.6	6.8	6	5.6	6.7	5.9	5.5	6.5	5.8	5.4	175
180	6.1	5.8	5.7	6.6	5.9	5.7	6.7	5.9	5.6	6.7	5.9	5.6	6.6	5.8	5.5	6.4	5.7	5.4	180
185	5.9	5.8	5.7	6.4	5.8	5.7	6.6	5.9	5.6	6.5	5.8	5.6	6.4	5.7	5.5	6.3	5.7	5.4	185
190	5.8	5.7	5.7	6.2	5.8	5.7	6.4	5.8	5.6	6.4	5.8	5.6	6.3	5.7	5.5	6.2	5.6	5.4	190
195	5.7	5.7	5.7	6.1	5.7	5.7	6.3	5.7	5.6	6.3	5.7	5.6	6.2	5.6	5.5	6.1	5.6	5.4	195
200	5.5	5.7	5.7	5.9	5.7	5.7	6.1	5.7	5.6	6.2	5.7	5.6	6.1	5.6	5.5	5.9	5.5	5.4	200
205	5.4	5.7		5.8	5.7	5.7	6	5.7	5.6	6.1	5.6	5.6	6	5.6	5.5	5.7	5.5	5.4	205
210	5.3			5.6	5.7	5.7	5.9	5.6	5.6	6	5.6	5.6	6	5.5	5.5	5.5	5.4	5.4	210
215	4.9			5.5	5.7		5.8	5.6	5.6	5.9	5.6	5.6	5.9	5.5	5.5	5.3	5.4	5.4	215
220				5.4	5.7		5.7	5.6	5.6	5.7	5.6	5.6	5.7	5.5	5.5	5.1	5.3	5.4	220
225				5.3			5.5	5.6	5.6	5.6	5.5	5.6	5.5	5.5	5.5	4.9	5.1	5.4	225
230							5.4	5.6		5.5	5.5	5.6	5	5.5	5.5	4.7	5	5.2	230
235							5.1	5.6		5.4	5.5	5.6	4.6	5.4	5.5	4.3	4.8	5	235
240							3.9			5.2	5.4	5.6	4.2	5	5.2	3.8	4.6	4.8	240
245										4.9	5.3		3.8	4.6	4.6	3.4	4.4	4.6	245
250										3.9			3.4	4.1	3.9	3	3.9	4.1	250
255										1.4			3	3.6		2.6	3.4	3.5	255
260													2.6	3.1		2.3	3	2.9	260
265																1.9	2.5		265
270																1.6	2.1		270

t_242_05000_00_000

Lifting capacities
Forces de levage

TNZK

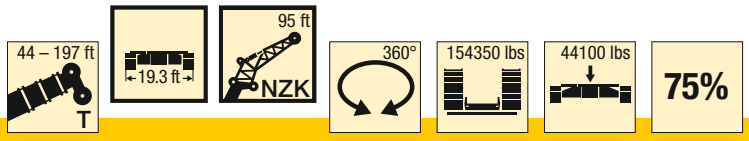

ft	44 ft			58 ft			72 ft			86 ft			100 ft			114 ft			ft
	95 ft			95 ft			95 ft			95 ft			95 ft			95 ft			
	0°	22.5°	45°	0°	22.5°	45°	0°	22.5°	45°	0°	22.5°	45°	0°	22.5°	45°	0°	22.5°	45°	
19	17.3			16.6															19
20	17.3			16.6															20
22	17.2			16.6			15.7												22
24	17.2			16.6			15.7												24
26	17.1			16.6			15.7			15.1									26
28	17			16.5			15.7			15.1			14.3						28
30	16.9			16.4			15.6			15.1			14.3						30
32	16.8			16.4			15.6			15			14.2			13.7			32
34	16.7			16.3			15.5			15			14.2			13.7			34
36	16.5			16.2			15.4			14.9			14.1			13.6			36
38	16.3			16			15.3			14.8			14.1			13.6			38
40	16.1			15.8			15.2			14.8			14			13.5			40
45	15.3			15.3			14.8			14.5			13.9			13.4			45
50	14.5			14.6			14.3			14.1			13.6			13.2			50
55	13.7	11.2		14			13.8			13.7			13.3			13			55
60	12.8	10.5		13.2	10.5		13.2			13.2			12.9			12.7			60
65	12	9.8		12.5	10		12.6	9.9		12.7	9.9		12.4			12.3			65
70	11.2	9.3		11.8	9.5		12	9.5		12.2	9.5		12			11.9			70
75	10.4	8.9		11.1	9.1		11.4	9.1		11.7	9.2		11.6	9.1		11.6	9.1		75
80	9.8	8.4	7.3	10.4	8.7		10.8	8.7		11.1	8.8		11.1	8.8		11.2	8.8		80
85	9.2	8	7	9.8	8.3	7	10.2	8.4	7	10.6	8.5		10.7	8.5		10.8	8.6		85
90	8.6	7.7	6.7	9.3	8	6.8	9.8	8.1	6.8	10.1	8.2		10.3	8.3		10.4	8.3		90
95	8.1	7.4	6.6	8.8	7.6	6.6	9.3	7.8	6.7	9.7	8	6.7	9.8	8	6.7	10	8		95
100	7.6	7.1	6.4	8.4	7.4	6.5	8.9	7.5	6.5	9.3	7.7	6.5	9.4	7.8	6.5	9.6	7.8	6.5	100
105	7.1	6.8	6.2	7.9	7.1	6.3	8.5	7.3	6.4	8.9	7.4	6.4	9.1	7.5	6.4	9.3	7.6	6.4	105
110	6.7	6.6	6.1	7.5	6.9	6.2	8.1	7.1	6.2	8.5	7.2	6.3	8.8	7.3	6.3	9	7.4	6.3	110
115	6.3	6.4	6	7.1	6.7	6.1	7.7	6.9	6.1	8.2	7	6.2	8.4	7.1	6.2	8.7	7.2	6.2	115
120	6	6.2	6	6.7	6.5	6	7.4	6.7	6	7.9	6.9	6.1	8.2	7	6.1	8.4	7	6.1	120
125	5.7	6.1		6.4	6.3	6	7	6.5	6	7.6	6.7	6	7.9	6.8	6	8.2	6.9	6	125
130	5.4	6.1		6.1	6.1	6	6.7	6.3	5.9	7.3	6.5	6	7.7	6.6	5.9	7.9	6.7	6	130
135				5.8	6	6	6.4	6.2	5.9	7	6.4	5.9	7.4	6.5	5.9	7.7	6.6	5.9	135
140				5.6	6		6.1	6.1	5.9	6.7	6.2	5.9	7.1	6.3	5.8	7.4	6.5	5.9	140
145				5.4			5.9	6	5.9	6.4	6.1	5.9	6.9	6.2	5.8	7.2	6.3	5.8	145
150							5.7	6		6.2	6	5.9	6.6	6.1	5.8	7	6.2	5.8	150
155							5.5			6	5.9	5.9	6.4	6	5.8	6.8	6.1	5.8	155
160										5.8	5.9	5.9	6.2	5.9	5.8	6.6	6	5.8	160
165										5.6	5.9		6	5.9	5.8	6.4	5.9	5.8	165
170										5.4			5.8	5.8	5.8	6.2	5.9	5.8	170
175													5.6	5.8	5.8	6	5.8	5.8	175
180													5.5			5.8	5.8	5.8	180
185													5.4			5.7	5.8	5.8	185
190																5.5	5.8		190
195																5.4	5.8		195
200																5.3			200

t_242_05010_00_000

Lifting capacities
Forces de levage

TNZK

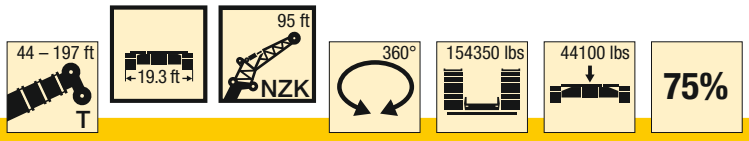

ft	128 ft			142 ft			156 ft			171 ft			185 ft			197 ft			ft
	95 ft			95 ft			95 ft			95 ft			95 ft			95 ft			
	0°	22.5°	45°	0°	22.5°	45°	0°	22.5°	45°	0°	22.5°	45°	0°	22.5°	45°	0°	22.5°	45°	
36	12.9																		36
38	12.9			13.5															38
40	12.8			13.4															40
45	12.7			13.3			12.6												45
50	12.6			13.2			12.5												50
55	12.4			13			12.4			11.4			10.2						55
60	12.2			12.9			12.3			11.3			10.1			9.2			60
65	11.9			12.6			12.1			11.2			10			9.1			65
70	11.6			12.3			11.9			11			9.9			9			70
75	11.3			12			11.6			10.8			9.8			8.9			75
80	11	8.7		11.7	9		11.3			10.6			9.7			8.8			80
85	10.6	8.5		11.3	8.8		11	8.7		10.4			9.5			8.7			85
90	10.3	8.3		11	8.6		10.8	8.5		10.2			9.3			8.7			90
95	9.9	8		10.6	8.3		10.5	8.3		9.9	8		9.2	7.7		8.6			95
100	9.6	7.8		10.3	8.1		10.1	8.1		9.6	7.8		9	7.5		8.4	7.3		100
105	9.3	7.6	6.4	10	7.9	6.5	9.8	7.8	6.4	9.4	7.7		8.8	7.4		8.3	7.1		105
110	9	7.4	6.3	9.6	7.7	6.4	9.6	7.7	6.3	9.2	7.5		8.7	7.2		8.2	7		110
115	8.7	7.2	6.2	9.3	7.5	6.3	9.3	7.5	6.2	8.9	7.3	6.2	8.5	7.1		8.1	6.9		115
120	8.5	7.1	6.1	9.1	7.3	6.2	9	7.3	6.2	8.7	7.2	6.1	8.3	7	6	7.9	6.8		120
125	8.3	6.9	6	8.8	7.2	6.1	8.8	7.2	6.1	8.5	7	6	8.2	6.8	5.9	7.8	6.6	5.8	125
130	8	6.8	5.9	8.5	7	6	8.5	7	6	8.3	6.9	5.9	8	6.7	5.8	7.6	6.5	5.7	130
135	7.8	6.6	5.9	8.3	6.9	6	8.3	6.9	5.9	8.2	6.8	5.8	7.8	6.6	5.8	7.5	6.4	5.7	135
140	7.6	6.5	5.8	8.1	6.7	5.9	8.1	6.7	5.9	8	6.7	5.8	7.6	6.5	5.7	7.4	6.3	5.6	140
145	7.4	6.4	5.8	7.8	6.6	5.8	7.9	6.6	5.8	7.8	6.5	5.8	7.5	6.4	5.7	7.3	6.2	5.6	145
150	7.2	6.3	5.8	7.6	6.5	5.8	7.7	6.5	5.8	7.6	6.4	5.7	7.4	6.3	5.6	7.1	6.2	5.5	150
155	7	6.2	5.7	7.4	6.4	5.8	7.5	6.4	5.7	7.4	6.3	5.7	7.2	6.2	5.6	7	6.1	5.5	155
160	6.8	6.1	5.7	7.2	6.2	5.7	7.3	6.3	5.7	7.3	6.2	5.6	7.1	6.1	5.5	6.9	6	5.5	160
165	6.7	6	5.7	7	6.2	5.7	7.2	6.2	5.7	7.1	6.1	5.6	6.9	6	5.5	6.8	5.9	5.5	165
170	6.5	5.9	5.7	6.9	6.1	5.7	7	6.1	5.6	7	6.1	5.6	6.8	6	5.5	6.6	5.8	5.4	170
175	6.3	5.8	5.7	6.7	6	5.7	6.8	6	5.6	6.8	6	5.6	6.7	5.9	5.5	6.5	5.8	5.4	175
180	6.1	5.8	5.7	6.6	5.9	5.7	6.7	5.9	5.6	6.7	5.9	5.6	6.6	5.8	5.5	6.4	5.7	5.4	180
185	5.9	5.8	5.7	6.4	5.8	5.7	6.5	5.9	5.6	6.5	5.8	5.6	6.4	5.7	5.5	6.1	5.7	5.4	185
190	5.8	5.7	5.7	6.2	5.8	5.7	6.4	5.8	5.6	6.3	5.8	5.6	6	5.7	5.5	5.7	5.6	5.4	190
195	5.7	5.7	5.7	6.1	5.7	5.7	6.2	5.7	5.6	6.2	5.7	5.6	5.4	5.6	5.5	5.1	5.6	5.4	195
200	5.5	5.7	5.7	5.9	5.7	5.7	6	5.7	5.6	6	5.7	5.6	4.9	5.6	5.5	4.6	5.5	5.4	200
205	5.4	5.7		5.7	5.7	5.7	5.9	5.6	5.6	5.5	5.6	5.6	4.3	5.6	5.5	4	5.4	5.4	205
210	5.3			5.5	5.7	5.7	5.8	5.6	5.6	5	5.6	5.6	3.8	5.3	5.5	3.5	5.1	5.4	210
215	4.9			5.5	5.7		5.5	5.6	5.6	4.5	5.5	5.6	3.3	4.7	5.3	3	4.5	5.3	215
220				5.4	5.7		5.1	5.6	5.6	4.1	5.1	5.5	2.9	4.1	4.8	2.6	4	4.8	220
225				5.3			4.6	5.3	5.2	3.6	4.6	4.9	2.4	3.6	4.2	2.1	3.4	4.2	225
230							4.2	4.8		3.2	4.1	4.2	2	3.1	3.6	1.7	2.9	3.6	230
235							3.8	4.2		2.8	3.6	3.6	1.6	2.6	3		2.4	3	235
240							3.5			2.5	3.1	2.8		2.2	2.4		2	2.4	240
245										2.1	2.6			1.7	1.8		1.5	1.9	245
250										1.8									250
255										1.4									255

t_242_05010_00_000

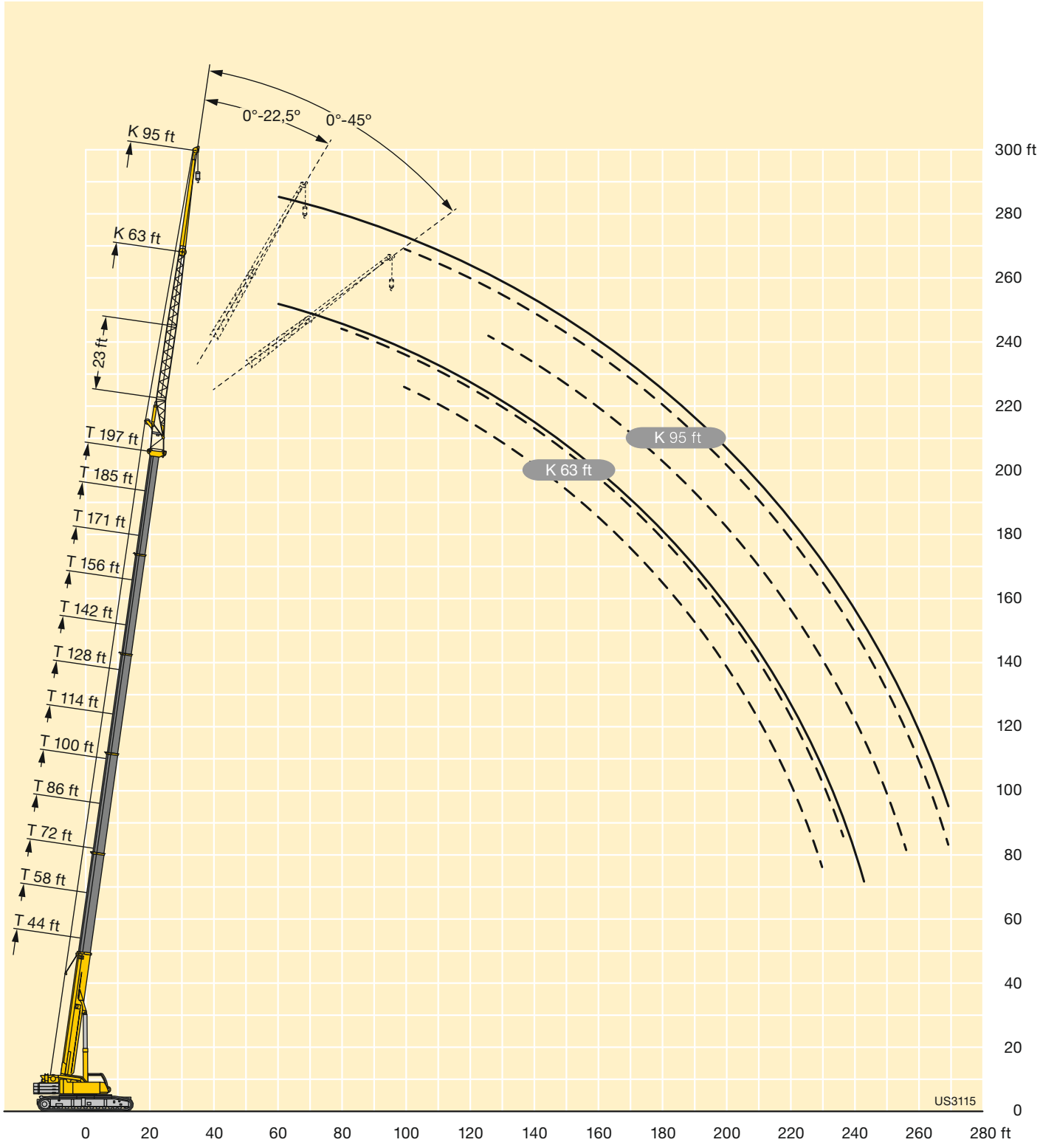
0°-22,5°
0°-45°
K 95 ft
K 63 ft
23 ft
T 197 ft
T 185 ft
T 171 ft
T 156 ft
T 142 ft
T 128 ft
T 114 ft
T 100 ft
T 86 ft
T 72 ft
T 58 ft
T 44 ft
K 95 ft
K 63 ft
300 ft
280
260
240
220
200
180
160
140
120
100
80
60
40
20
0
0
20
40
60
80
100
120
140
160
180
200
220
240
260
280 ft
US3115

Lifting capacities
Forces de levage

TNZK

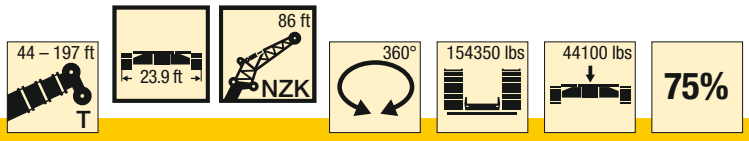

ft	44 ft 86 ft 0°	44 ft 86 ft 22.5°	44 ft 86 ft 45°	58 ft 86 ft 0°	58 ft 86 ft 22.5°	58 ft 86 ft 45°	72 ft 86 ft 0°	72 ft 86 ft 22.5°	72 ft 86 ft 45°	86 ft 86 ft 0°	86 ft 86 ft 22.5°	86 ft 86 ft 45°	100 ft 86 ft 0°	100 ft 86 ft 22.5°	100 ft 86 ft 45°	114 ft 86 ft 0°	114 ft 86 ft 22.5°	114 ft 86 ft 45°	ft
18	27.1																		18
19	27			25.4															19
20	26.8			25.3															20
22	26.4			25.1			23.1												22
24	26			24.8			22.9			21.7									24
26	25.5			24.6			22.8			21.6									26
28	25			24.2			22.6			21.5			20						28
30	24.4			23.9			22.4			21.4			19.9						30
32	23.7			23.5			22.1			21.2			19.8			18.8			32
34	22.9			22.8			21.7			21			19.7			18.7			34
36	22			22.2			21.3			20.7			19.5			18.6			36
38	21.2			21.5			20.9			20.4			19.3			18.4			38
40	20.5			20.9			20.4			20			19			18.3			40
45	18.6			19.3			19.1			19			18.3			17.8			45
50	17	13		17.8			17.9			17.9			17.4			17.1			50
55	15.6	12		16.4	12.2		16.7	12.1		16.9			16.6			16.4			55
60	14.2	11.2		15.2	11.4		15.6	11.4		15.9	11.5		15.8			15.7			60
65	12.9	10.5		14.1	10.7		14.5	10.8		15	10.9		15	10.8		15	10.8		65
70	11.7	9.8	8.8	13	10.1		13.6	10.2		14.1	10.4		14.2	10.3		14.3	10.3		70
75	10.7	9.3	8.4	12	9.6	8.5	12.8	9.7		13.3	9.9		13.5	9.9		13.6	9.9		75
80	9.8	8.9	8.1	11	9.2	8.2	11.9	9.3	8.2	12.6	9.5		12.8	9.5		13	9.5		80
85	9.1	8.4	7.8	10.2	8.8	7.9	11.1	9	8	11.8	9.1	8	12.1	9.2	8	12.4	9.2		85
90	8.5	8.1	7.6	9.5	8.4	7.7	10.3	8.6	7.8	11.1	8.8	7.8	11.5	8.9	7.8	11.8	8.9		90
95	7.9	7.8	7.4	8.9	8.1	7.5	9.7	8.3	7.6	10.5	8.5	7.6	10.9	8.6	7.7	11.3	8.7	7.7	95
100	7.5	7.5	7.2	8.4	7.8	7.3	9.1	8	7.4	9.9	8.2	7.5	10.4	8.3	7.5	10.8	8.4	7.5	100
105	7.1	7.2	7.1	7.9	7.6	7.2	8.7	7.8	7.3	9.3	8	7.3	9.9	8.1	7.4	10.3	8.2	7.4	105
110	6.6	7	7.1	7.5	7.3	7.1	8.2	7.5	7.1	8.9	7.8	7.2	9.4	7.9	7.2	9.8	8	7.3	110
115	6.3	6.8	7.1	7.1	7.1	7	7.8	7.3	7.1	8.5	7.5	7.1	9	7.6	7.1	9.4	7.8	7.1	115
120	6	6.8		6.8	6.9	7	7.4	7.1	7	8.1	7.3	7	8.6	7.5	7	9	7.6	7.1	120
125				6.4	6.8	7	7.1	7	7	7.7	7.2	6.9	8.2	7.3	7	8.7	7.4	7	125
130				6.1	6.7		6.8	6.8	7	7.4	7	6.9	7.9	7.1	6.9	8.4	7.2	6.9	130
135				5.9			6.5	6.7	7	7.1	6.9	6.9	7.6	7	6.9	8	7.1	6.9	135
140							6.2	6.7		6.8	6.7	6.9	7.3	6.8	6.9	7.7	7	6.8	140
145							6	6.7		6.5	6.7	6.9	7	6.7	6.9	7.4	6.8	6.8	145
150							5.9			6.3	6.6	6.9	6.8	6.6	6.9	7.2	6.7	6.8	150
155										6.1	6.6		6.5	6.6	6.9	7	6.6	6.8	155
160										5.9	6.6		6.3	6.5	6.9	6.7	6.6	6.8	160
165													6.1	6.5		6.5	6.5	6.8	165
170													6	6.5		6.3	6.5	6.8	170
175													5.8			6.2	6.4	6.8	175
180																6	6.4		180
185																5.9	6.4		185
190																5.8			190

t_242_04000_00_000

Lifting capacities
Forces de levage

TNZK

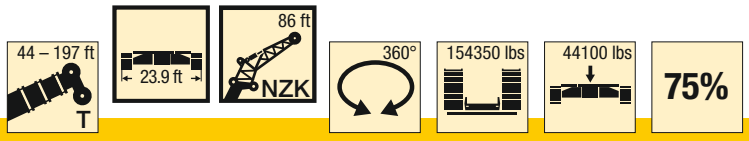

ft	128 ft			142 ft			156 ft			171 ft			185 ft			197 ft			ft
	86 ft			86 ft			86 ft			86 ft			86 ft			86 ft			
	0°	22.5°	45°	0°	22.5°	45°	0°	22.5°	45°	0°	22.5°	45°	0°	22.5°	45°	0°	22.5°	45°	
38	17.2			18.2															38
40	17.1			18.1															40
45	16.8			17.8			16.6												45
50	16.3			17.4			16.3			14.6									50
55	15.8			16.9			16			14.4									55
60	15.2			16.3			15.7			14.2			12						60
65	14.6			15.7			15.2			13.9			11.8			10.2			65
70	14			15.1			14.6			13.5			11.6			10.1			70
75	13.4	9.8		14.5	10.3		14.1			13.1			11.5			9.9			75
80	12.9	9.5		13.9	9.9		13.6	9.8		12.7			11.3			9.8			80
85	12.3	9.2		13.3	9.6		13.1	9.5		12.3			11.1			9.6			85
90	11.8	8.9		12.8	9.3		12.6	9.2		11.9	8.9		10.8			9.6			90
95	11.3	8.7	7.6	12.3	9		12.1	8.9		11.6	8.7		10.6	8.4		9.5	8.1		95
100	10.9	8.4	7.5	11.8	8.7	7.6	11.7	8.7	7.6	11.2	8.5		10.3	8.2		9.5	7.9		100
105	10.4	8.2	7.4	11.3	8.5	7.5	11.3	8.5	7.4	10.8	8.3	7.3	10	8		9.3	7.7		105
110	10	8	7.2	10.9	8.3	7.4	10.9	8.3	7.3	10.5	8.1	7.2	9.8	7.8		9.2	7.6		110
115	9.6	7.8	7.1	10.4	8.1	7.2	10.5	8.1	7.2	10.1	7.9	7.1	9.5	7.7	7	9	7.4		115
120	9.3	7.6	7.1	10	7.9	7.2	10.1	7.9	7.1	9.8	7.8	7.1	9.3	7.5	6.9	8.8	7.3	6.8	120
125	9	7.4	7	9.6	7.7	7.1	9.8	7.7	7	9.5	7.6	7	9.1	7.4	6.8	8.7	7.2	6.7	125
130	8.7	7.3	6.9	9.3	7.6	7	9.4	7.5	7	9.2	7.4	6.9	8.8	7.2	6.8	8.5	7.1	6.7	130
135	8.4	7.1	6.9	9.1	7.4	6.9	9.1	7.4	6.9	9	7.3	6.8	8.6	7.1	6.7	8.3	6.9	6.6	135
140	8.1	7	6.8	8.8	7.2	6.8	8.9	7.3	6.8	8.7	7.2	6.7	8.4	7	6.7	8.1	6.8	6.6	140
145	7.8	6.9	6.8	8.5	7.1	6.8	8.6	7.1	6.8	8.5	7	6.7	8.3	6.9	6.6	8	6.7	6.5	145
150	7.5	6.8	6.8	8.2	7	6.8	8.4	7	6.7	8.3	6.9	6.7	8.1	6.8	6.6	7.8	6.6	6.5	150
155	7.3	6.7	6.8	7.9	6.8	6.7	8.2	6.9	6.7	8.1	6.8	6.6	7.9	6.7	6.5	7.7	6.5	6.4	155
160	7.1	6.6	6.8	7.7	6.8	6.7	7.9	6.8	6.7	7.9	6.7	6.6	7.7	6.6	6.5	7.5	6.4	6.4	160
165	6.8	6.5	6.8	7.4	6.6	6.7	7.7	6.6	6.7	7.7	6.6	6.6	7.6	6.5	6.5	7.4	6.4	6.4	165
170	6.7	6.4	6.8	7.2	6.6	6.7	7.5	6.6	6.6	7.5	6.5	6.6	7.4	6.4	6.5	7.2	6.3	6.4	170
175	6.5	6.4	6.8	7	6.5	6.7	7.3	6.5	6.6	7.4	6.4	6.6	7.3	6.3	6.5	7	6.2	6.4	175
180	6.3	6.4	6.8	6.8	6.4	6.7	7.1	6.4	6.6	7.2	6.4	6.6	7.1	6.3	6.5	6.8	6.1	6.4	180
185	6.2	6.4	6.8	6.6	6.4	6.7	6.9	6.3	6.6	7	6.3	6.6	7	6.2	6.5	6.6	6.1	6.4	185
190	6	6.4		6.4	6.3	6.7	6.7	6.3	6.6	6.8	6.2	6.6	6.8	6.1	6.5	6.4	6	6.4	190
195	5.9	6.4		6.3	6.3	6.7	6.5	6.3	6.6	6.7	6.2	6.6	6.7	6.1	6.5	6.1	6	6.4	195
200	5.8			6.1	6.3	6.7	6.4	6.2	6.6	6.5	6.2	6.6	6.6	6.1	6.5	5.9	5.9	6.4	200
205	5.8			6	6.3		6.2	6.2	6.6	6.4	6.1	6.6	6.5	6	6.5	5.7	5.8	6.4	205
210				5.9	6.3		6.1	6.2	6.6	6.2	6.1	6.6	6.3	6	6.5	5.4	5.7	6.2	210
215				5.8	6.3		5.9	6.2	6.6	6.1	6.1	6.6	5.9	6	6.5	5.2	5.5	5.9	215
220				3.7			5.8	6.2		6	6.1	6.5	5.4	6	6.5	5	5.3	5.7	220
225							5.7	5.5		5.8	6	6.3	5	5.8	6.3	4.6	5.1	5.4	225
230							4.8	5.3		5.6	5.8		4.5	5.3	5.7	4.2	4.9	5.2	230
235										5.3	5.6		4.1	4.8	5.1	3.7	4.6	5	235
240										4.5			3.7	4.4	4.5	3.3	4.2	4.6	240
245										2.4			3.3	3.8	3.7	2.9	3.7	4	245
250													2.9	3.4		2.5	3.2	3.3	250
255													1.9	2.9		2.1	2.7	2.7	255
260																1.8	2.3		260

t_242_04000_00_000

Lifting capacities
Forces de levage

TNZK

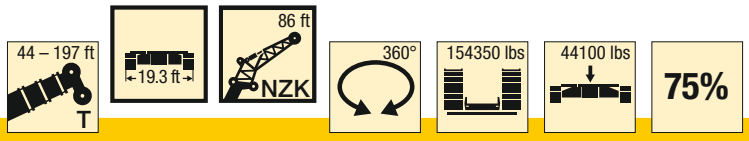

ft	44 ft			58 ft			72 ft			86 ft			100 ft			114 ft			ft
	86 ft			86 ft			86 ft			86 ft			86 ft			86 ft			
	0°	22.5°	45°	0°	22.5°	45°	0°	22.5°	45°	0°	22.5°	45°	0°	22.5°	45°	0°	22.5°	45°	
18	27.1																		18
19	27			25.4															19
20	26.8			25.3															20
22	26.4			25.1			23.1												22
24	26			24.8			22.9			21.7									24
26	25.5			24.6			22.8			21.6									26
28	25			24.2			22.6			21.5			20						28
30	24.4			23.9			22.4			21.4			19.9						30
32	23.7			23.5			22.1			21.2			19.8			18.8			32
34	22.9			22.8			21.7			21			19.7			18.7			34
36	22			22.2			21.3			20.7			19.5			18.6			36
38	21.2			21.5			20.9			20.4			19.3			18.4			38
40	20.5			20.9			20.4			20			19			18.3			40
45	18.6			19.3			19.1			19			18.3			17.8			45
50	17	13		17.8			17.9			17.9			17.4			17.1			50
55	15.6	12		16.4	12.2		16.7	12.1		16.9			16.6			16.4			55
60	14.2	11.2		15.2	11.4		15.6	11.4		15.9	11.5		15.8			15.7			60
65	12.9	10.5		14.1	10.7		14.5	10.8		15	10.9		15	10.8		15	10.8		65
70	11.7	9.8	8.8	13	10.1		13.6	10.2		14.1	10.4		14.2	10.3		14.3	10.3		70
75	10.7	9.3	8.4	12	9.6	8.5	12.8	9.7		13.3	9.9		13.5	9.9		13.6	9.9		75
80	9.8	8.9	8.1	11	9.2	8.2	11.9	9.3	8.2	12.6	9.5		12.8	9.5		13	9.5		80
85	9.1	8.4	7.8	10.2	8.8	7.9	11.1	9	8	11.8	9.1	8	12.1	9.2	8	12.4	9.2		85
90	8.5	8.1	7.6	9.5	8.4	7.7	10.3	8.6	7.8	11.1	8.8	7.8	11.5	8.9	7.8	11.8	8.9		90
95	7.9	7.8	7.4	8.9	8.1	7.5	9.7	8.3	7.6	10.5	8.5	7.6	10.9	8.6	7.7	11.3	8.7	7.7	95
100	7.5	7.5	7.2	8.4	7.8	7.3	9.1	8	7.4	9.9	8.2	7.5	10.4	8.3	7.5	10.8	8.4	7.5	100
105	7.1	7.2	7.1	7.9	7.6	7.2	8.7	7.8	7.3	9.3	8	7.3	9.9	8.1	7.4	10.3	8.2	7.4	105
110	6.6	7	7.1	7.5	7.3	7.1	8.2	7.5	7.1	8.9	7.8	7.2	9.4	7.9	7.2	9.8	8	7.3	110
115	6.3	6.8	7.1	7.1	7.1	7	7.8	7.3	7.1	8.5	7.5	7.1	9	7.6	7.1	9.4	7.8	7.1	115
120	6	6.8		6.8	6.9	7	7.4	7.1	7	8.1	7.3	7	8.6	7.5	7	9	7.6	7.1	120
125				6.4	6.8	7	7.1	7	7	7.7	7.2	6.9	8.2	7.3	7	8.7	7.4	7	125
130				6.1	6.7		6.8	6.8	7	7.4	7	6.9	7.9	7.1	6.9	8.4	7.2	6.9	130
135				5.9			6.5	6.7	7	7.1	6.9	6.9	7.6	7	6.9	8	7.1	6.9	135
140							6.2	6.7		6.8	6.7	6.9	7.3	6.8	6.9	7.7	7	6.8	140
145							6	6.7		6.5	6.7	6.9	7	6.7	6.9	7.4	6.8	6.8	145
150							5.9			6.3	6.6	6.9	6.8	6.6	6.9	7.2	6.7	6.8	150
155										6.1	6.6		6.5	6.6	6.9	7	6.6	6.8	155
160										5.9	6.6		6.3	6.5	6.9	6.7	6.6	6.8	160
165													6.1	6.5		6.5	6.5	6.8	165
170													6	6.5		6.3	6.5	6.8	170
175													5.8			6.2	6.4	6.8	175
180																6	6.4		180
185																5.9	6.4		185
190																5.8			190

t_242_04010_00_000

Lifting capacities
Forces de levage

TNZK

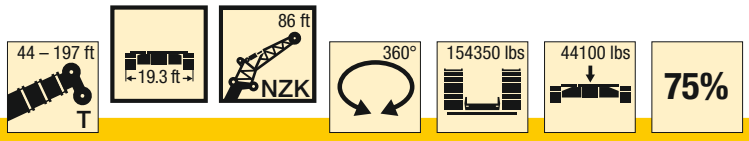

ft	128 ft			142 ft			156 ft			171 ft			185 ft			197 ft			ft
	86 ft			86 ft			86 ft			86 ft			86 ft			86 ft			
	0°	22.5°	45°	0°	22.5°	45°	0°	22.5°	45°	0°	22.5°	45°	0°	22.5°	45°	0°	22.5°	45°	
38	17.2			18.2															38
40	17.1			18.1															40
45	16.8			17.8			16.6												45
50	16.3			17.4			16.3			14.6									50
55	15.8			16.9			16			14.4									55
60	15.2			16.3			15.7			14.2			12						60
65	14.6			15.7			15.2			13.9			11.8			10.2			65
70	14			15.1			14.6			13.5			11.6			10.1			70
75	13.4	9.8		14.5	10.3		14.1			13.1			11.5			9.9			75
80	12.9	9.5		13.9	9.9		13.6	9.8		12.7			11.3			9.8			80
85	12.3	9.2		13.3	9.6		13.1	9.5		12.3			11.1			9.6			85
90	11.8	8.9		12.8	9.3		12.6	9.2		11.9	8.9		10.8			9.6			90
95	11.3	8.7	7.6	12.3	9		12.1	8.9		11.6	8.7		10.6	8.4		9.5	8.1		95
100	10.9	8.4	7.5	11.8	8.7	7.6	11.7	8.7	7.6	11.2	8.5		10.3	8.2		9.5	7.9		100
105	10.4	8.2	7.4	11.3	8.5	7.5	11.3	8.5	7.4	10.8	8.3	7.3	10	8		9.3	7.7		105
110	10	8	7.2	10.9	8.3	7.4	10.9	8.3	7.3	10.5	8.1	7.2	9.8	7.8		9.2	7.6		110
115	9.6	7.8	7.1	10.4	8.1	7.2	10.5	8.1	7.2	10.1	7.9	7.1	9.5	7.7	7	9	7.4		115
120	9.3	7.6	7.1	10	7.9	7.2	10.1	7.9	7.1	9.8	7.8	7.1	9.3	7.5	6.9	8.8	7.3	6.8	120
125	9	7.4	7	9.6	7.7	7.1	9.8	7.7	7	9.5	7.6	7	9.1	7.4	6.8	8.7	7.2	6.7	125
130	8.7	7.3	6.9	9.3	7.6	7	9.4	7.5	7	9.2	7.4	6.9	8.8	7.2	6.8	8.5	7.1	6.7	130
135	8.4	7.1	6.9	9.1	7.4	6.9	9.1	7.4	6.9	9	7.3	6.8	8.6	7.1	6.7	8.3	6.9	6.6	135
140	8.1	7	6.8	8.8	7.2	6.8	8.9	7.3	6.8	8.7	7.2	6.7	8.4	7	6.7	8.1	6.8	6.6	140
145	7.8	6.9	6.8	8.5	7.1	6.8	8.6	7.1	6.8	8.5	7	6.7	8.3	6.9	6.6	8	6.7	6.5	145
150	7.5	6.8	6.8	8.2	7	6.8	8.4	7	6.7	8.3	6.9	6.7	8.1	6.8	6.6	7.8	6.6	6.5	150
155	7.3	6.7	6.8	7.9	6.8	6.7	8.2	6.9	6.7	8.1	6.8	6.6	7.9	6.7	6.5	7.7	6.5	6.4	155
160	7.1	6.6	6.8	7.7	6.8	6.7	7.9	6.8	6.7	7.9	6.7	6.6	7.7	6.6	6.5	7.5	6.4	6.4	160
165	6.8	6.5	6.8	7.4	6.6	6.7	7.7	6.6	6.7	7.7	6.6	6.6	7.6	6.5	6.5	7.4	6.4	6.4	165
170	6.7	6.4	6.8	7.2	6.6	6.7	7.5	6.6	6.6	7.5	6.5	6.6	7.4	6.4	6.5	7.2	6.3	6.4	170
175	6.5	6.4	6.8	7	6.5	6.7	7.2	6.5	6.6	7.2	6.4	6.6	7.2	6.3	6.5	6.8	6.2	6.4	175
180	6.3	6.4	6.8	6.8	6.4	6.7	7	6.4	6.6	7.1	6.4	6.6	6.7	6.3	6.5	6.2	6.1	6.4	180
185	6.2	6.4	6.8	6.6	6.4	6.7	6.8	6.3	6.6	6.9	6.3	6.6	6	6.2	6.5	5.6	6.1	6.4	185
190	6	6.4		6.4	6.3	6.7	6.5	6.3	6.6	6.6	6.2	6.6	5.4	6.1	6.5	5.1	6	6.4	190
195	5.9	6.4		6.1	6.3	6.7	6.4	6.2	6.6	6	6.2	6.6	4.8	6	6.5	4.5	6	6.4	195
200	5.8			6	6.3	6.7	6.2	6.2	6.6	5.5	6.1	6.6	4.2	5.7	6.4	3.9	5.4	6.4	200
205	5.8			5.9	6.3		5.9	6.2	6.6	4.9	6	6.6	3.7	5	6.1	3.4	4.8	6	205
210				5.8	6.3		5.5	6.2	6.5	4.4	5.5	6.1	3.2	4.5	5.4	2.9	4.3	5.3	210
215				5.8	6.3		5	5.7	5.8	4	4.9	5.4	2.8	3.9	4.7	2.4	3.7	4.7	215
220				3.7			4.6	5.1		3.5	4.4	4.7	2.3	3.4	4	2	3.2	4	220
225							4.2	4.6		3.1	3.9	4	1.9	2.8	3.4	1.4	2.7	3.4	225
230							3.8	4.1		2.7	3.4		1.4	2.4	2.8		2.2	2.8	230
235										2.4	2.9			1.9	2.2		1.7	2.2	235
240										2				1.4	1.5			1.6	240
245										1.7									245

t_242_04010_00_000

Lifting capacities
Forces de levage

TNZK

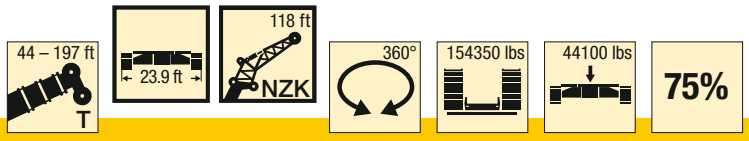

ft	44 ft 118 ft 0°	44 ft 118 ft 22.5°	44 ft 118 ft 45°	58 ft 118 ft 0°	58 ft 118 ft 22.5°	58 ft 118 ft 45°	72 ft 118 ft 0°	72 ft 118 ft 22.5°	72 ft 118 ft 45°	86 ft 118 ft 0°	86 ft 118 ft 22.5°	86 ft 118 ft 45°	100 ft 118 ft 0°	100 ft 118 ft 22.5°	100 ft 118 ft 45°	114 ft 118 ft 0°	114 ft 118 ft 22.5°	114 ft 118 ft 45°	ft
22	12.2																		22
24	12.6																		24
26	12.8			12															26
28	12.7			12.2			11.3												28
30	12.7			12.1			11.3												30
32	12.5			12			11.3			10.8									32
34	12.4			12			11.2			10.8									34
36	12.3			11.9			11.2			10.7			10.1						36
38	12.1			11.7			11.1			10.7			10.1			9.7			38
40	11.9			11.6			11			10.6			10			9.7			40
45	11.4			11.2			10.7			10.4			9.9			9.6			45
50	10.9			10.8			10.4			10.2			9.7			9.5			50
55	10.3			10.3			10			9.8			9.5			9.3			55
60	9.7			9.8			9.6			9.5			9.2			9.1			60
65	9.1	7.6		9.3			9.2			9.2			9			8.8			65
70	8.6	7.2		8.8			8.8			8.9			8.7			8.6			70
75	8.1	6.8		8.4	6.9		8.4			8.5			8.4			8.3			75
80	7.6	6.5		7.9	6.5		8	6.5		8.2	6.5		8.1			8.1			80
85	7.2	6.1		7.5	6.2		7.7	6.2		7.8	6.2		7.8	6.2		7.8	6.2		85
90	6.8	5.8		7.1	5.9		7.3	6		7.5	6		7.5	6		7.6	6		90
95	6.4	5.6		6.8	5.7		7	5.7		7.2	5.8		7.2	5.8		7.3	5.8		95
100	6.1	5.3	4.5	6.4	5.4		6.7	5.5		6.9	5.6		6.9	5.6		7	5.6		100
105	5.7	5.1	4.4	6.1	5.2	4.4	6.4	5.3	4.4	6.6	5.4		6.7	5.4		6.8	5.4		105
110	5.4	4.8	4.2	5.8	5	4.3	6.1	5.1	4.3	6.3	5.2		6.4	5.2		6.6	5.2		110
115	5.1	4.6	4.1	5.5	4.8	4.2	5.8	4.9	4.2	6.1	5	4.2	6.2	5	4.2	6.3	5.1		115
120	4.8	4.4	4	5.3	4.6	4	5.6	4.7	4.1	5.8	4.9	4.1	6	4.9	4.1	6.1	4.9	4	120
125	4.5	4.3	3.9	5	4.5	4	5.3	4.6	4	5.6	4.7	4	5.8	4.7	4	5.9	4.8	4	125
130	4.3	4.1	3.8	4.8	4.3	3.8	5.1	4.4	3.9	5.4	4.5	3.9	5.5	4.6	3.9	5.7	4.7	3.9	130
135	4.1	4	3.7	4.5	4.2	3.8	4.9	4.3	3.8	5.2	4.4	3.8	5.3	4.5	3.8	5.5	4.5	3.8	135
140	3.8	3.9	3.7	4.3	4	3.7	4.7	4.2	3.7	5	4.3	3.8	5.2	4.3	3.7	5.3	4.4	3.8	140
145	3.6	3.8	3.7	4.1	3.9	3.7	4.5	4	3.7	4.8	4.2	3.7	5	4.2	3.7	5.2	4.3	3.7	145
150	3.5	3.7		3.9	3.8	3.7	4.3	4	3.6	4.6	4	3.7	4.8	4.1	3.6	5	4.2	3.6	150
155				3.7	3.7		4.1	3.9	3.6	4.5	3.9	3.6	4.7	4	3.6	4.8	4.1	3.6	155
160				3.5	3.7		3.9	3.8	3.6	4.3	3.9	3.6	4.5	3.9	3.6	4.7	4	3.6	160
165				3.4	3.7		3.8	3.7	3.6	4.1	3.8	3.6	4.4	3.8	3.6	4.5	3.9	3.5	165
170							3.6	3.6		3.9	3.7	3.6	4.2	3.8	3.6	4.4	3.8	3.5	170
175							3.5	3.6		3.8	3.6	3.6	4.1	3.7	3.6	4.3	3.7	3.5	175
180							3.4			3.7	3.6	3.6	3.9	3.6	3.6	4.2	3.7	3.5	180
185										3.5	3.6		3.8	3.6	3.6	4	3.6	3.5	185
190										3.4	3.6		3.7	3.6	3.6	3.9	3.6	3.5	190
195										3.3			3.6	3.6		3.8	3.5	3.5	195
200													3.4	3.6		3.7	3.5	3.5	200
205													3.4			3.6	3.5	3.5	205
210													3.3			3.5	3.5		210
215																3.4	3.5		215
220																3.3	3.5		220

t_242_06000_00_000

Lifting capacities
Forces de levage

TNZK

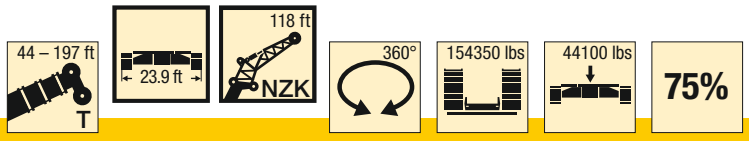

ft	128 ft			142 ft			156 ft			171 ft			185 ft			197 ft			ft
	118 ft			118 ft			118 ft			118 ft			118 ft			118 ft			
	0°	22.5°	45°	0°	22.5°	45°	0°	22.5°	45°	0°	22.5°	45°	0°	22.5°	45°	0°	22.5°	45°	
45	9.1			9.5															45
50	9			9.4															50
55	8.9			9.3			8.9			8.2									55
60	8.8			9.2			8.8			8.1			7.4						60
65	8.6			9			8.7			8.1			7.3			6.7			65
70	8.4			8.8			8.5			8			7.2			6.6			70
75	8.1			8.6			8.3			7.8			7.1			6.6			75
80	7.9			8.3			8.1			7.6			7			6.5			80
85	7.7			8.1			7.9			7.5			6.9			6.4			85
90	7.5			7.9			7.7			7.3			6.8			6.3			90
95	7.2	5.7		7.7	5.9		7.5			7.1			6.7			6.2			95
100	7	5.6		7.4	5.8		7.3	5.7		7			6.5			6.1			100
105	6.8	5.4		7.2	5.6		7.1	5.5		6.8	5.4		6.4			6			105
110	6.6	5.2		7	5.4		6.9	5.4		6.6	5.2		6.2	5		5.9	4.8		110
115	6.3	5.1		6.7	5.3		6.7	5.2		6.4	5.1		6.1	4.9		5.7	4.7		115
120	6.2	4.9		6.5	5.1		6.5	5.1		6.3	5		5.9	4.8		5.6	4.6		120
125	6	4.8	3.9	6.3	5	4	6.3	4.9	4	6.1	4.9		5.8	4.7		5.5	4.5		125
130	5.8	4.7	3.9	6.1	4.9	3.9	6.1	4.8	3.9	5.9	4.7		5.7	4.6		5.4	4.4		130
135	5.6	4.6	3.8	5.9	4.7	3.9	6	4.7	3.8	5.8	4.6	3.8	5.5	4.5		5.3	4.3		135
140	5.4	4.4	3.7	5.8	4.6	3.8	5.8	4.6	3.8	5.6	4.5	3.7	5.4	4.4	3.6	5.2	4.2		140
145	5.2	4.3	3.7	5.6	4.5	3.7	5.6	4.5	3.7	5.5	4.4	3.7	5.3	4.3	3.6	5.1	4.2	3.5	145
150	5.1	4.2	3.6	5.4	4.4	3.7	5.5	4.4	3.7	5.3	4.3	3.6	5.2	4.2	3.5	5	4.1	3.5	150
155	4.9	4.1	3.6	5.2	4.3	3.6	5.3	4.3	3.6	5.2	4.2	3.6	5	4.1	3.5	4.9	4	3.4	155
160	4.8	4	3.5	5.1	4.2	3.6	5.2	4.2	3.6	5.1	4.1	3.5	4.9	4	3.4	4.7	3.9	3.4	160
165	4.7	3.9	3.5	4.9	4.1	3.5	5	4.1	3.5	5	4.1	3.5	4.8	4	3.4	4.7	3.9	3.4	165
170	4.5	3.9	3.5	4.8	4	3.5	4.9	4	3.5	4.8	4	3.4	4.7	3.9	3.4	4.6	3.8	3.3	170
175	4.4	3.8	3.5	4.7	3.9	3.5	4.7	3.9	3.5	4.7	3.9	3.4	4.6	3.8	3.4	4.5	3.7	3.3	175
180	4.3	3.7	3.5	4.5	3.8	3.5	4.6	3.9	3.4	4.6	3.8	3.4	4.5	3.8	3.3	4.4	3.7	3.3	180
185	4.2	3.7	3.5	4.4	3.8	3.4	4.5	3.8	3.4	4.5	3.8	3.3	4.4	3.7	3.3	4.3	3.6	3.3	185
190	4.1	3.6	3.5	4.3	3.7	3.4	4.4	3.7	3.4	4.4	3.7	3.3	4.3	3.6	3.3	4.2	3.6	3.2	190
195	4	3.6	3.5	4.2	3.6	3.4	4.3	3.7	3.4	4.3	3.6	3.3	4.2	3.6	3.3	4.1	3.5	3.2	195
200	3.9	3.5	3.5	4.1	3.6	3.4	4.2	3.6	3.4	4.2	3.6	3.3	4.1	3.5	3.3	4	3.5	3.2	200
205	3.8	3.5	3.5	4	3.5	3.4	4.1	3.6	3.4	4.1	3.5	3.3	4	3.5	3.3	3.9	3.4	3.2	205
210	3.7	3.4	3.5	3.9	3.5	3.4	4	3.5	3.4	4	3.5	3.3	3.9	3.4	3.3	3.9	3.4	3.2	210
215	3.6	3.4	3.5	3.8	3.5	3.4	3.9	3.5	3.4	3.9	3.4	3.3	3.9	3.4	3.3	3.8	3.3	3.2	215
220	3.5	3.4		3.7	3.4	3.4	3.8	3.4	3.4	3.8	3.4	3.3	3.8	3.3	3.3	3.7	3.3	3.2	220
225	3.4	3.4		3.6	3.4	3.4	3.7	3.4	3.4	3.7	3.4	3.3	3.7	3.3	3.3	3.7	3.3	3.2	225
230	3.3	3.4		3.5	3.4	3.4	3.6	3.4	3.4	3.7	3.3	3.3	3.6	3.3	3.3	3.6	3.2	3.2	230
235	3.3			3.5	3.4		3.6	3.4	3.4	3.6	3.3	3.3	3.6	3.3	3.3	3.5	3.2	3.2	235
240				3.4	3.4		3.5	3.4	3.4	3.5	3.3	3.3	3.5	3.2	3.3	3.5	3.2	3.2	240
245				3.3			3.5	3.4		3.5	3.3	3.3	3.5	3.2	3.3	3.3	3.2	3.2	245
250				3.2			3.4	3.4		3.4	3.3	3.3	3.4	3.2	3.3	3	3.2	3.2	250
255							3.3	3.4		3.4	3.3	3.3	3.1	3.2	3.3	2.7	3.2	3.2	255
260							3.2			3.3	3.3	3.3	2.7	3.2	3.3	2.3	3.2	3.2	260
265										3.3	3.3		2.3	3.2	3.2	1.9	3	3.2	265
270										3.1	3.3		2	2.8	2.7	1.6	2.6	2.9	270
275													1.7	2.4			2.2	2.3	275
280													1.4	1.9			1.8	1.8	280

t_242_06000_00_000

Lifting capacities
Forces de levage

TNZK

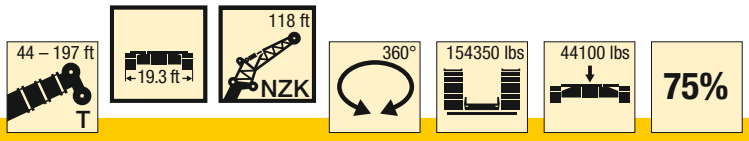

ft	44 ft			58 ft			72 ft			86 ft			100 ft			114 ft			ft
	118 ft			118 ft			118 ft			118 ft			118 ft			118 ft			
	0°	22.5°	45°	0°	22.5°	45°	0°	22.5°	45°	0°	22.5°	45°	0°	22.5°	45°	0°	22.5°	45°	
22	12.2																		22
24	12.6																		24
26	12.8			12															26
28	12.7			12.2			11.3												28
30	12.7			12.1			11.3												30
32	12.5			12			11.3			10.8									32
34	12.4			12			11.2			10.8									34
36	12.3			11.9			11.2			10.7			10.1						36
38	12.1			11.7			11.1			10.7			10.1			9.7			38
40	11.9			11.6			11			10.6			10			9.7			40
45	11.4			11.2			10.7			10.4			9.9			9.6			45
50	10.9			10.8			10.4			10.2			9.7			9.5			50
55	10.3			10.3			10			9.8			9.5			9.3			55
60	9.7			9.8			9.6			9.5			9.2			9.1			60
65	9.1	7.6		9.3			9.2			9.2			9			8.8			65
70	8.6	7.2		8.8			8.8			8.9			8.7			8.6			70
75	8.1	6.8		8.4	6.9		8.4			8.5			8.4			8.3			75
80	7.6	6.5		7.9	6.5		8	6.5		8.2	6.5		8.1			8.1			80
85	7.2	6.1		7.5	6.2		7.7	6.2		7.8	6.2		7.8	6.2		7.8	6.2		85
90	6.8	5.8		7.1	5.9		7.3	6		7.5	6		7.5	6		7.6	6		90
95	6.4	5.6		6.8	5.7		7	5.7		7.2	5.8		7.2	5.8		7.3	5.8		95
100	6.1	5.3	4.5	6.4	5.4		6.7	5.5		6.9	5.6		6.9	5.6		7	5.6		100
105	5.7	5.1	4.4	6.1	5.2	4.4	6.4	5.3	4.4	6.6	5.4		6.7	5.4		6.8	5.4		105
110	5.4	4.8	4.2	5.8	5	4.3	6.1	5.1	4.3	6.3	5.2		6.4	5.2		6.6	5.2		110
115	5.1	4.6	4.1	5.5	4.8	4.2	5.8	4.9	4.2	6.1	5	4.2	6.2	5	4.2	6.3	5.1		115
120	4.8	4.4	4	5.3	4.6	4	5.6	4.7	4.1	5.8	4.9	4.1	6	4.9	4.1	6.1	4.9	4	120
125	4.5	4.3	3.9	5	4.5	4	5.3	4.6	4	5.6	4.7	4	5.8	4.7	4	5.9	4.8	4	125
130	4.3	4.1	3.8	4.8	4.3	3.8	5.1	4.4	3.9	5.4	4.5	3.9	5.5	4.6	3.9	5.7	4.7	3.9	130
135	4.1	4	3.7	4.5	4.2	3.8	4.9	4.3	3.8	5.2	4.4	3.8	5.3	4.5	3.8	5.5	4.5	3.8	135
140	3.8	3.9	3.7	4.3	4	3.7	4.7	4.2	3.7	5	4.3	3.8	5.2	4.3	3.7	5.3	4.4	3.8	140
145	3.6	3.8	3.7	4.1	3.9	3.7	4.5	4	3.7	4.8	4.2	3.7	5	4.2	3.7	5.2	4.3	3.7	145
150	3.5	3.7		3.9	3.8	3.7	4.3	4	3.6	4.6	4	3.7	4.8	4.1	3.6	5	4.2	3.6	150
155				3.7	3.7		4.1	3.9	3.6	4.5	3.9	3.6	4.7	4	3.6	4.8	4.1	3.6	155
160				3.5	3.7		3.9	3.8	3.6	4.3	3.9	3.6	4.5	3.9	3.6	4.7	4	3.6	160
165				3.4	3.7		3.8	3.7	3.6	4.1	3.8	3.6	4.4	3.8	3.6	4.5	3.9	3.5	165
170							3.6	3.6		3.9	3.7	3.6	4.2	3.8	3.6	4.4	3.8	3.5	170
175							3.5	3.6		3.8	3.6	3.6	4.1	3.7	3.6	4.3	3.7	3.5	175
180							3.4			3.7	3.6	3.6	3.9	3.6	3.6	4.2	3.7	3.5	180
185										3.5	3.6		3.8	3.6	3.6	4	3.6	3.5	185
190										3.4	3.6		3.7	3.6	3.6	3.9	3.6	3.5	190
195										3.3			3.6	3.6		3.8	3.5	3.5	195
200													3.4	3.6		3.7	3.5	3.5	200
205													3.4			3.6	3.5	3.5	205
210													3.3			3.5	3.5		210
215																3.4	3.5		215
220																3.3	3.5		220

t_242_06010_00_000

Lifting capacities
Forces de levage

TNZK

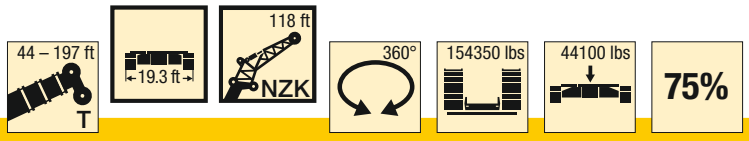

ft	128 ft			142 ft			156 ft			171 ft			185 ft			197 ft			ft
	118 ft			118 ft			118 ft			118 ft			118 ft			118 ft			
	0°	22.5°	45°	0°	22.5°	45°	0°	22.5°	45°	0°	22.5°	45°	0°	22.5°	45°	0°	22.5°	45°	
45	9.1			9.5															45
50	9			9.4															50
55	8.9			9.3			8.9			8.2									55
60	8.8			9.2			8.8			8.1			7.4						60
65	8.6			9			8.7			8.1			7.3			6.7			65
70	8.4			8.8			8.5			8			7.2			6.6			70
75	8.1			8.6			8.3			7.8			7.1			6.6			75
80	7.9			8.3			8.1			7.6			7			6.5			80
85	7.7			8.1			7.9			7.5			6.9			6.4			85
90	7.5			7.9			7.7			7.3			6.8			6.3			90
95	7.2	5.7		7.7	5.9		7.5			7.1			6.7			6.2			95
100	7	5.6		7.4	5.8		7.3	5.7		7			6.5			6.1			100
105	6.8	5.4		7.2	5.6		7.1	5.5		6.8	5.4		6.4			6			105
110	6.6	5.2		7	5.4		6.9	5.4		6.6	5.2		6.2	5		5.9	4.8		110
115	6.3	5.1		6.7	5.3		6.7	5.2		6.4	5.1		6.1	4.9		5.7	4.7		115
120	6.2	4.9		6.5	5.1		6.5	5.1		6.3	5		5.9	4.8		5.6	4.6		120
125	6	4.8	3.9	6.3	5	4	6.3	4.9	4	6.1	4.9		5.8	4.7		5.5	4.5		125
130	5.8	4.7	3.9	6.1	4.9	3.9	6.1	4.8	3.9	5.9	4.7		5.7	4.6		5.4	4.4		130
135	5.6	4.6	3.8	5.9	4.7	3.9	6	4.7	3.8	5.8	4.6	3.8	5.5	4.5		5.3	4.3		135
140	5.4	4.4	3.7	5.8	4.6	3.8	5.8	4.6	3.8	5.6	4.5	3.7	5.4	4.4	3.6	5.2	4.2		140
145	5.2	4.3	3.7	5.6	4.5	3.7	5.6	4.5	3.7	5.5	4.4	3.7	5.3	4.3	3.6	5.1	4.2	3.5	145
150	5.1	4.2	3.6	5.4	4.4	3.7	5.5	4.4	3.7	5.3	4.3	3.6	5.2	4.2	3.5	5	4.1	3.5	150
155	4.9	4.1	3.6	5.2	4.3	3.6	5.3	4.3	3.6	5.2	4.2	3.6	5	4.1	3.5	4.9	4	3.4	155
160	4.8	4	3.5	5.1	4.2	3.6	5.2	4.2	3.6	5.1	4.1	3.5	4.9	4	3.4	4.7	3.9	3.4	160
165	4.7	3.9	3.5	4.9	4.1	3.5	5	4.1	3.5	5	4.1	3.5	4.8	4	3.4	4.7	3.9	3.4	165
170	4.5	3.9	3.5	4.8	4	3.5	4.9	4	3.5	4.8	4	3.4	4.7	3.9	3.4	4.6	3.8	3.3	170
175	4.4	3.8	3.5	4.7	3.9	3.5	4.7	3.9	3.5	4.7	3.9	3.4	4.6	3.8	3.4	4.5	3.7	3.3	175
180	4.3	3.7	3.5	4.5	3.8	3.5	4.6	3.9	3.4	4.6	3.8	3.4	4.5	3.8	3.3	4.4	3.7	3.3	180
185	4.2	3.7	3.5	4.4	3.8	3.4	4.5	3.8	3.4	4.5	3.8	3.3	4.4	3.7	3.3	4.3	3.6	3.3	185
190	4.1	3.6	3.5	4.3	3.7	3.4	4.4	3.7	3.4	4.4	3.7	3.3	4.3	3.6	3.3	4.2	3.6	3.2	190
195	4	3.6	3.5	4.2	3.6	3.4	4.3	3.7	3.4	4.3	3.6	3.3	4.2	3.6	3.3	4.1	3.5	3.2	195
200	3.9	3.5	3.5	4.1	3.6	3.4	4.2	3.6	3.4	4.2	3.6	3.3	4.1	3.5	3.3	4	3.5	3.2	200
205	3.8	3.5	3.5	4	3.5	3.4	4.1	3.6	3.4	4.1	3.5	3.3	4	3.5	3.3	3.8	3.4	3.2	205
210	3.7	3.4	3.5	3.9	3.5	3.4	3.9	3.5	3.4	3.9	3.5	3.3	3.9	3.4	3.3	3.5	3.4	3.2	210
215	3.6	3.4	3.5	3.8	3.5	3.4	3.9	3.5	3.4	3.8	3.4	3.3	3.5	3.4	3.3	3	3.3	3.2	215
220	3.5	3.4		3.7	3.4	3.4	3.8	3.4	3.4	3.8	3.4	3.3	3	3.3	3.3	2.6	3.3	3.2	220
225	3.4	3.4		3.6	3.4	3.4	3.7	3.4	3.4	3.7	3.4	3.3	2.6	3.3	3.3	2.2	3.3	3.2	225
230	3.3	3.4		3.5	3.4	3.4	3.6	3.4	3.4	3.3	3.3	3.3	2.1	3.3	3.3	1.7	3.2	3.2	230
235	3.3			3.4	3.4		3.5	3.4	3.4	2.9	3.3	3.3	1.7	3.2	3.3		2.9	3.2	235
240				3.3	3.4		3.4	3.4	3.4	2.5	3.3	3.3		2.8	3.3		2.5	3.2	240
245				3.3			3.1	3.4		2.2	3.2	3.3		2.3	3		2.1	2.9	245
250				3.2			2.8	3.3		1.8	2.8	3		1.9	2.4		1.6	2.4	250
255							2.5	3		1.5	2.3	2.4		1.3	1.9			1.9	255
260							2.2				1.9	1.7							260
265											1.5								265

t_242_06010_00_000

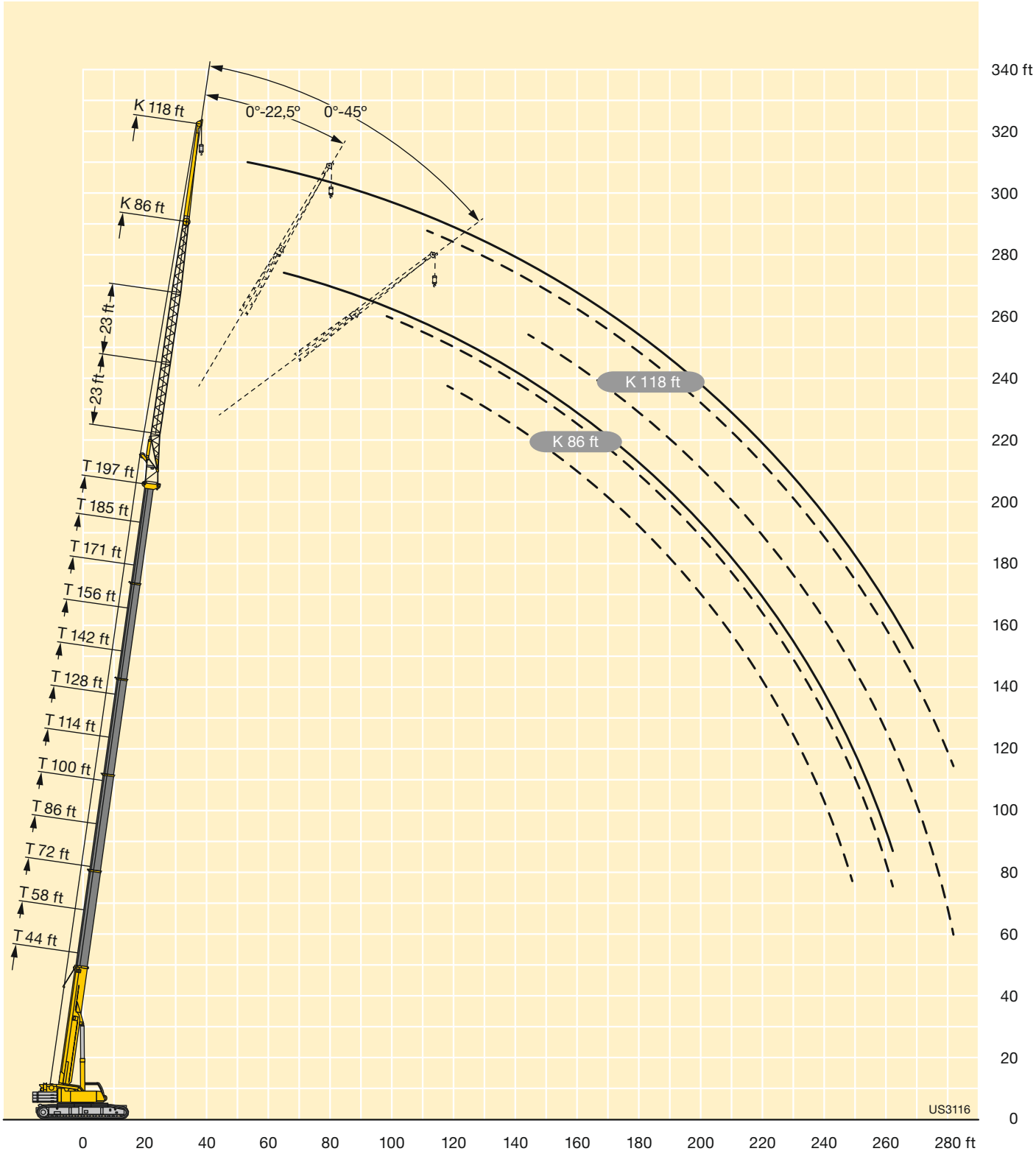
K 118 ft
K 86 ft
0°-22,5°
0°-45°
23 ft
23 ft
T 197 ft
T 185 ft
T 171 ft
T 156 ft
T 142 ft
T 128 ft
T 114 ft
T 100 ft
T 86 ft
T 72 ft
T 58 ft
T 44 ft
K 118 ft
K 86 ft
US3116
340 ft
320
300
280
260
240
220
200
180
160
140
120
100
80
60
40
20
0
0
20
40
60
80
100
120
140
160
180
200
220
240
260
280 ft

Lifting capacities
Forces de levage

TVNZK

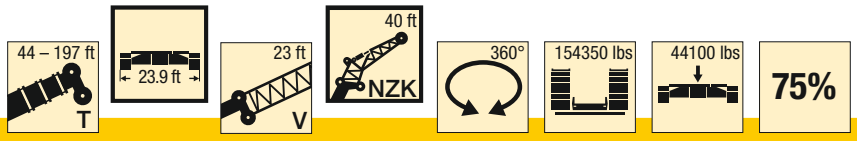

ft	44 ft + 23 ft			58 ft + 23 ft			72 ft + 23 ft			86 ft + 23 ft			100 ft + 23 ft			114 ft + 23 ft			ft
	40 ft			40 ft			40 ft			40 ft			40 ft			40 ft			
	0°	22.5°	45°	0°	22.5°	45°	0°	22.5°	45°	0°	22.5°	45°	0°	22.5°	45°	0°	22.5°	45°	
11	46.1																		11
12	46.1																		12
13	46.1																		13
14	46.1			46.1															14
15	46.1			46.1															15
16	46.1			46.1															16
17	46.1			46.1															17
18	46.1			46.1															18
19	46.1			46.1			44.5												19
20	46.1			46.1			44.4												20
22	46.1			46.1			44.3			40.6									22
24	46.1			46.1			44.1			40.6									24
26	46.1	37.8		45.9			43.8			40.5			36						26
28	45.4	36.3		45.1			43			40.3			36						28
30	43.6	34.9		44	35.9		41.8			40.1			35.9			33.3			30
32	41.8	33.6		42.5	34.7		40.7			39.5			35.8			33.3			32
34	40.1	32.4		41	33.5		39.5			38.6			35.5			33.2			34
36	38.4	31.3	23.2	39.6	32.5		38.4	32.4		37.7			35.2			33.1			36
38	36.8	30.3	23.2	38.2	31.5		37.2	31.6		36.8			34.6			32.9			38
40	35.3	29.4	23.2	36.8	30.5	23.2	36.1	30.7		35.8	30.4		33.9			32.6			40
45	32.1	27.3	22.7	33.7	28.4	23.1	33.5	28.8	23.2	33.5	28.7		32.1	27.8		31.3	27.2		45
50	29.1	25.4	21.8	31.1	26.7	22.3	30.8	27	22.5	31.5	27.1		30.1	26.5		29.8	26.1		50
55	26.7	23.9	21	28.7	25.2	21.5	28.2	25.2	21.8	29.5	25.7	22.1	27.9	25.2	22.2	28.2	25		55
60	24.5	22.4	20.3	26.6	23.7	20.8	26.1	23.5	21.1	27.5	24.3	21.4	25.9	24.1	21.6	26.5	23.9	21.5	60
65	22.6	20.8	19.8	24.7	22.2	20.3	24	22	20.6	25.7	22.8	20.9	24.1	22.8	21	24.8	23	20.9	65
70	20.8	19.4	19.2	23	20.9	19.8	22.3	20.6	19.8	24	21.6	20.3	22.4	21.5	20.3	23.2	21.9	20.2	70
75	19.3	18.1	18.3	21.5	19.6	19.2	20.6	19.3	18.9	22.4	20.4	19.5	21	20.1	19.5	21.9	20.7	19.6	75
80	17.9	17	17.4	20.1	18.5	18.5	19.2	18.2	17.9	21	19.3	18.6	19.7	18.9	18.7	20.6	19.6	18.9	80
85	16.7	16	16.6	18.8	17.5	17.6	18	17.2	17	19.7	18.3	17.8	18.4	17.9	17.7	19.5	18.5	18.2	85
90	15.5	15.1	15.6	17.6	16.6	16.9	16.8	16.3	16.2	18.6	17.4	17	17.3	16.9	16.8	18.4	17.6	17.3	90
95	14.5	14.4		16.6	15.8	16.2	15.8	15.4	15.5	17.5	16.6	16.3	16.3	15.9	15.9	17.3	16.7	16.5	95
100				15.7	15.1	12.1	14.9	14.6	14.8	16.6	15.9	15.7	15.4	15	15.1	16.4	15.9	15.7	100
105				14.8	14.5		14	13.8	14.1	15.7	15.2	15.1	14.5	14.2	14.3	15.6	15.1	15	105
110				14	13.9		13.3	13.1	13.4	14.9	14.5	14.6	13.7	13.5	13.6	14.8	14.4	14.4	110
115							12.6	12.5		14.2	13.9	14	13	12.8	13	14.1	13.7	13.7	115
120							11.9	11.9		13.5	13.3		12.3	12.2	12.4	13.4	13.1	13.2	120
125							11.4	11.5		12.9	12.7		11.7	11.6	11.8	12.8	12.5	12.6	125
130										12.4	12.3		11.1	11.1	11.2	12.2	12	12.1	130
135										11.9	11.9		10.6	10.5		11.7	11.5	11.6	135
140										11.5			10.1	10.1		11.2	11	11.2	140
145													9.7	9.7		10.7	10.6	10.7	145
150													9.4	9.4		10.3	10.2		150
155													9.1			9.9	9.9		155
160																9.6	9.6		160
165																9.4	9.4		165
170																5.1			170

t_242_01400_00_000

Lifting capacities
Forces de levage

TVNZK

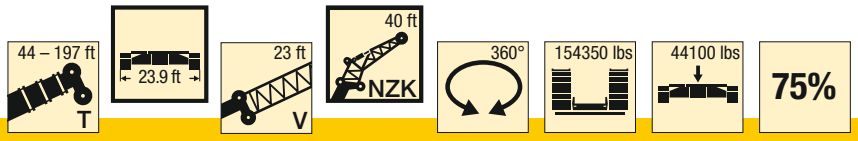

ft	128 ft + 23 ft			142 ft + 23 ft			156 ft + 23 ft			171 ft + 23 ft			185 ft + 23 ft			197 ft + 23 ft			ft
	40 ft			40 ft			40 ft			40 ft			40 ft			40 ft			
	0°	22.5°	45°	0°	22.5°	45°	0°	22.5°	45°	0°	22.5°	45°	0°	22.5°	45°	0°	22.5°	45°	
36	30																		36
38	29.9																		38
40	29.8			27.8															40
45	29.3			27.5			25.1			22.8									45
50	28.3			27.2			25			22.7									50
55	27.2	24.1		26.4			24.8			22.6			18.9			16.5			55
60	25.9	23.3		25.4	22.8		24.2	21.2		22.5			18.8			16.4			60
65	24.5	22.4	20.3	24.4	22.1	20	23.5	20.7		22.2	19.8		18.8	18.6		16.4			65
70	23.2	21.6	19.8	23.3	21.4	19.4	22.6	20.1		21.8	19.3		18.6	18.3		16.4			70
75	21.9	20.6	19.2	22.1	20.6	18.9	21.7	19.6	18.3	21.2	18.9	17.3	18.4	17.9		16.3	16.2		75
80	20.7	19.6	18.6	21	19.7	18.4	20.8	18.9	17.8	20.6	18.4	16.8	18	17.6	15.7	16.2	15.8		80
85	19.5	18.7	18	20	18.8	18	19.8	18.2	17.2	19.7	17.9	16.4	17.6	17.2	15.4	15.8	15.4	13.9	85
90	18.4	17.8	17.2	18.9	18	17.3	18.9	17.5	16.8	18.9	17.3	16	17.2	16.8	15.1	15.3	14.9	13.6	90
95	17.4	16.9	16.5	18	17.2	16.6	18	16.8	16.3	18	16.7	15.6	16.8	16.3	14.7	14.8	14.4	13.4	95
100	16.4	16.1	15.8	17.1	16.5	16	17.2	16.2	15.8	17.3	16.1	15.2	16.2	15.8	14.4	14.2	13.9	13.1	100
105	15.5	15.4	15.2	16.2	15.8	15.4	16.4	15.6	15.3	16.5	15.6	14.8	15.7	15.2	14.1	13.7	13.4	12.8	105
110	14.7	14.6	14.6	15.4	15.1	14.8	15.7	15	14.7	15.9	15	14.4	15.2	14.8	13.7	13.2	12.9	12.6	110
115	13.9	13.9	14	14.6	14.5	14.3	14.9	14.4	14.3	15.2	14.5	14	14.7	14.3	13.4	12.8	12.5	12.3	115
120	13.1	13.2	13.3	14	13.8	13.8	14.2	13.9	13.8	14.6	14	13.7	14.1	13.8	13.1	12.3	12.1	12	120
125	12.5	12.5	12.7	13.3	13.2	13.2	13.6	13.3	13.3	14	13.5	13.3	13.6	13.4	12.8	11.8	11.6	11.6	125
130	11.8	11.9	12.1	12.6	12.6	12.7	12.9	12.8	12.8	13.4	13	13	13.1	12.9	12.5	11.3	11.2	11.3	130
135	11.2	11.3	11.5	12.1	12	12.1	12.3	12.3	12.3	12.8	12.5	12.5	12.6	12.5	12.2	10.9	10.8	10.9	135
140	10.7	10.8	11	11.5	11.5	11.6	11.6	11.8	11.9	12.2	12	12.1	12.2	12	11.9	10.4	10.5	10.6	140
145	10.2	10.2	10.4	11	11	11.1	11.1	11.3	11.4	11.7	11.6	11.7	11.7	11.6	11.6	10	10.1	10.2	145
150	9.7	9.8	10	10.5	10.5	10.7	10.5	10.8	10.9	11.1	11.1	11.3	11.2	11.2	11.3	9.6	9.7	9.9	150
155	9.3	9.4	9.6	10	10.1	10.2	10	10.2	10.4	10.6	10.7	10.8	10.8	10.8	10.9	9.2	9.4	9.5	155
160	9	9		9.7	9.7	9.8	9.6	9.8	9.9	10.2	10.3	10.4	10.3	10.4	10.6	8.8	9	9.2	160
165	8.6	8.7		9.3	9.3	9.5	9.2	9.4	9.5	9.7	9.9	10	9.9	10	10.2	8.5	8.7	8.9	165
170	8.3	8.4		9	9	9.2	8.8	9	9.1	9.4	9.5	9.6	9.6	9.7	9.8	8.2	8.4	8.5	170
175	8	8.1		8.7	8.8		8.4	8.6	8.8	9	9.1	9.3	9.3	9.4	9.5	7.9	8.1	8.2	175
180	7.8	7.8		8.4	8.5		8.1	8.3	8.4	8.7	8.8	8.9	9	9.1	9.2	7.6	7.7	7.9	180
185				8.2	8.2		7.8	8	8.1	8.4	8.5	8.6	8.7	8.8	8.9	7.3	7.4	7.6	185
190				8	8		7.5	7.7		8.1	8.2	8.3	8.3	8.5	8.6	7	7.1	7.3	190
195				7.4			7.2	7.3		7.8	7.9	8	7.7	8.2	8.3	6.8	6.9	7	195
200							6.9	7		7.5	7.6		7.1	7.6	7.7	6.5	6.6	6.7	200
205							6.6	6.8		7.2	7.4		6.6	7	7.1	6.2	6.4	6.5	205
210							4.4			7	7.1		6	6.4	6.5	5.8	6.1	6.2	210
215										6.5	6.8		5.6	5.9		5.3	5.8	5.8	215
220										4.9			5.1	5.4		4.8	5.2	5.3	220
225													4.6	4.9		4.3	4.7		225
230													4.1	4.3		3.8	4.2		230
235													2.1			3.4	3.7		235
240																2.9	3.2		240
245																1.8			245

t_242_01400_00_000

Lifting capacities
Forces de levage

TVNZK

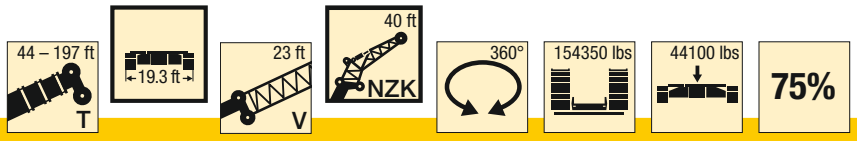

ft	44 ft + 23 ft			58 ft + 23 ft			72 ft + 23 ft			86 ft + 23 ft			100 ft + 23 ft			114 ft + 23 ft			ft
	40 ft			40 ft			40 ft			40 ft			40 ft			40 ft			
	0°	22.5°	45°	0°	22.5°	45°	0°	22.5°	45°	0°	22.5°	45°	0°	22.5°	45°	0°	22.5°	45°	
11	46.1																		11
12	46.1																		12
13	46.1																		13
14	46.1			46.1															14
15	46.1			46.1															15
16	46.1			46.1															16
17	46.1			46.1															17
18	46.1			46.1															18
19	46.1			46.1			44.5												19
20	46.1			46.1			44.4												20
22	46.1			46.1			44.3			40.6									22
24	46.1			46.1			44.1			40.6									24
26	46.1	37.8		45.9			43.8			40.5			36						26
28	45.4	36.3		45.1			43			40.3			36						28
30	43.6	34.9		44	35.9		41.8			40.1			35.9			33.3			30
32	41.8	33.6		42.5	34.7		40.7			39.5			35.8			33.3			32
34	40.1	32.4		41	33.5		39.5			38.6			35.5			33.2			34
36	38.4	31.3	23.2	39.6	32.5		38.4	32.4		37.7			35.2			33.1			36
38	36.8	30.3	23.2	38.2	31.5		37.2	31.6		36.8			34.6			32.9			38
40	35.3	29.4	23.2	36.8	30.5	23.2	36.1	30.7		35.8	30.4		33.9			32.6			40
45	32.1	27.3	22.7	33.7	28.4	23.1	33.5	28.8	23.2	33.5	28.7		32.1	27.8		31.3	27.2		45
50	29.1	25.4	21.8	31.1	26.7	22.3	30.8	27	22.5	31.5	27.1		30.1	26.5		29.8	26.1		50
55	26.7	23.9	21	28.7	25.2	21.5	28.2	25.2	21.8	29.5	25.7	22.1	27.9	25.2	22.2	28.2	25		55
60	24.5	22.4	20.3	26.6	23.7	20.8	26.1	23.5	21.1	27.5	24.3	21.4	25.9	24.1	21.6	26.5	23.9	21.5	60
65	22.6	20.8	19.8	24.7	22.2	20.3	24	22	20.6	25.7	22.8	20.9	24.1	22.8	21	24.8	23	20.9	65
70	20.8	19.4	19.2	23	20.9	19.8	22.3	20.6	19.8	24	21.6	20.3	22.4	21.5	20.3	23.2	21.9	20.2	70
75	19.3	18.1	18.3	21.5	19.6	19.2	20.6	19.3	18.9	22.4	20.4	19.5	21	20.1	19.5	21.9	20.7	19.6	75
80	17.9	17	17.4	20.1	18.5	18.5	19.2	18.2	17.9	21	19.3	18.6	19.7	18.9	18.7	20.6	19.6	18.9	80
85	16.7	16	16.6	18.8	17.5	17.6	18	17.2	17	19.7	18.3	17.8	18.4	17.9	17.7	19.5	18.5	18.2	85
90	15.5	15.1	15.6	17.6	16.6	16.9	16.8	16.3	16.2	18.6	17.4	17	17.3	16.9	16.8	18.4	17.6	17.3	90
95	14.5	14.4		16.6	15.8	16.2	15.8	15.4	15.5	17.5	16.6	16.3	16.3	15.9	15.9	17.3	16.7	16.5	95
100				15.7	15.1	12.1	14.9	14.6	14.8	16.6	15.9	15.7	15.4	15	15.1	16.4	15.9	15.7	100
105				14.8	14.5		14	13.8	14.1	15.7	15.2	15.1	14.5	14.2	14.3	15.6	15.1	15	105
110				14	13.9		13.3	13.1	13.4	14.9	14.5	14.6	13.7	13.5	13.6	14.8	14.4	14.4	110
115							12.6	12.5		14.2	13.9	14	13	12.8	13	14.1	13.7	13.7	115
120							11.9	11.9		13.5	13.3		12.3	12.2	12.4	13.4	13.1	13.2	120
125							11.4	11.5		12.9	12.7		11.7	11.6	11.8	12.8	12.5	12.6	125
130										12.4	12.3		11.1	11.1	11.2	12.2	12	12.1	130
135										11.9	11.9		10.6	10.5		11.7	11.5	11.6	135
140										11.5			10.1	10.1		11.2	11	11.2	140
145													9.7	9.7		10.7	10.6	10.7	145
150													9.4	9.4		10.3	10.2		150
155													9.1			9.9	9.9		155
160																9.6	9.6		160
165																9.4	9.4		165
170																5.1			170

t_242_01410_00_000

Lifting capacities
Forces de levage

TVNZK

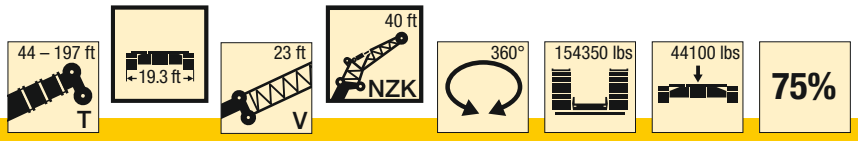

ft	128 ft + 23 ft			142 ft + 23 ft			156 ft + 23 ft			171 ft + 23 ft			185 ft + 23 ft			197 ft + 23 ft			ft
	40 ft			40 ft			40 ft			40 ft			40 ft			40 ft			
	0°	22.5°	45°	0°	22.5°	45°	0°	22.5°	45°	0°	22.5°	45°	0°	22.5°	45°	0°	22.5°	45°	
36	30																		36
38	29.9																		38
40	29.8			27.8															40
45	29.3			27.5			25.1			22.8									45
50	28.3			27.2			25			22.7									50
55	27.2	24.1		26.4			24.8			22.6			18.9			16.5			55
60	25.9	23.3		25.4	22.8		24.2	21.2		22.5			18.8			16.4			60
65	24.5	22.4	20.3	24.4	22.1	20	23.5	20.7		22.2	19.8		18.8	18.6		16.4			65
70	23.2	21.6	19.8	23.3	21.4	19.4	22.6	20.1		21.8	19.3		18.6	18.3		16.4			70
75	21.9	20.6	19.2	22.1	20.6	18.9	21.7	19.6	18.3	21.2	18.9	17.3	18.4	17.9		16.3	16.2		75
80	20.7	19.6	18.6	21	19.7	18.4	20.8	18.9	17.8	20.6	18.4	16.8	18	17.6	15.7	16.2	15.8		80
85	19.5	18.7	18	20	18.8	18	19.8	18.2	17.2	19.7	17.9	16.4	17.6	17.2	15.4	15.8	15.4	13.9	85
90	18.4	17.8	17.2	18.9	18	17.3	18.9	17.5	16.8	18.9	17.3	16	17.2	16.8	15.1	15.3	14.9	13.6	90
95	17.4	16.9	16.5	18	17.2	16.6	18	16.8	16.3	18	16.7	15.6	16.8	16.3	14.7	14.8	14.4	13.4	95
100	16.4	16.1	15.8	17.1	16.5	16	17.2	16.2	15.8	17.3	16.1	15.2	16.2	15.8	14.4	14.2	13.9	13.1	100
105	15.5	15.4	15.2	16.2	15.8	15.4	16.4	15.6	15.3	16.5	15.6	14.8	15.7	15.2	14.1	13.7	13.4	12.8	105
110	14.7	14.6	14.6	15.4	15.1	14.8	15.7	15	14.7	15.9	15	14.4	15.2	14.8	13.7	13.2	12.9	12.6	110
115	13.9	13.9	14	14.6	14.5	14.3	14.9	14.4	14.3	15.2	14.5	14	14.7	14.3	13.4	12.8	12.5	12.3	115
120	13.1	13.2	13.3	14	13.8	13.8	14.2	13.9	13.8	14.6	14	13.7	14.1	13.8	13.1	12.3	12.1	12	120
125	12.5	12.5	12.7	13.3	13.2	13.2	13.6	13.3	13.3	14	13.5	13.3	13.6	13.4	12.8	11.8	11.6	11.6	125
130	11.8	11.9	12.1	12.6	12.6	12.7	12.9	12.8	12.8	13.4	13	13	13.1	12.9	12.5	11.3	11.2	11.3	130
135	11.2	11.3	11.5	12.1	12	12.1	12.3	12.3	12.3	12.8	12.5	12.5	12.6	12.5	12.2	10.9	10.8	10.9	135
140	10.7	10.8	11	11.5	11.5	11.6	11.6	11.8	11.9	12.2	12	12.1	12.2	12	11.9	10.4	10.5	10.6	140
145	10.2	10.2	10.4	11	11	11.1	11.1	11.3	11.4	11.7	11.6	11.7	11.7	11.6	11.6	10	10.1	10.2	145
150	9.7	9.8	10	10.5	10.5	10.7	10.5	10.8	10.9	11.1	11.1	11.3	11.1	11.2	11.3	9.6	9.7	9.9	150
155	9.3	9.4	9.6	10	10.1	10.2	10	10.2	10.4	10.6	10.7	10.8	10.3	10.8	10.9	9.2	9.4	9.5	155
160	9	9		9.7	9.7	9.8	9.6	9.8	9.9	10.2	10.3	10.4	9.4	10.3	10.6	8.8	9	9.2	160
165	8.6	8.7		9.3	9.3	9.5	9.2	9.4	9.5	9.5	9.9	10	8.5	9.5	10	8.2	8.7	8.9	165
170	8.3	8.4		9	9	9.2	8.8	9	9.1	8.7	9.5	9.6	7.7	8.6	9.1	7.5	8.3	8.5	170
175	8	8.1		8.7	8.8		8.4	8.6	8.8	8	8.9	9.1	7	7.8	8.3	6.7	7.6	8.1	175
180	7.8	7.8		8.4	8.5		8.1	8.3	8.4	7.3	8.2	8.4	6.3	7	7.5	6	6.9	7.3	180
185				8.2	8.2		7.6	8	8.1	6.6	7.4	7.7	5.6	6.3	6.7	5.4	6.2	6.6	185
190				8	8		7	7.6		6	6.7	6.9	5	5.7	5.9	4.8	5.5	5.8	190
195				7.4			6.5	6.9		5.4	6.1	6.2	4.4	5	5.3	4.2	4.8	5.2	195
200							5.9	6.3		4.9	5.5		3.8	4.4	4.6	3.6	4.2	4.5	200
205							5.5	5.7		4.4	4.9		3.3	3.8	4	3.1	3.6	3.9	205
210							4.4			3.9	4.3		2.8	3.3	3.3	2.6	3.1	3.3	210
215										3.5	3.8		2.3	2.7		2.1	2.6	2.7	215
220										3.1			1.9	2.2		1.6	2.1	2.1	220
225													1.4	1.8			1.5		225

t_242_01410_00_000

Lifting capacities
Forces de levage

TVNZK

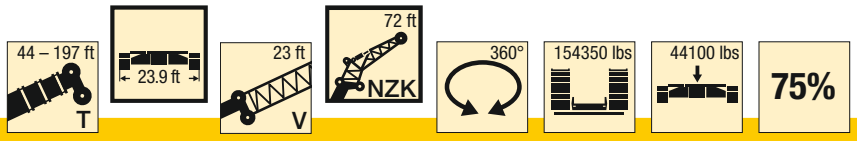

ft	44 ft + 23 ft			58 ft + 23 ft			72 ft + 23 ft			86 ft + 23 ft			100 ft + 23 ft			114 ft + 23 ft			ft
	72 ft			72 ft			72 ft			72 ft			72 ft			72 ft			
	0°	22.5°	45°	0°	22.5°	45°	0°	22.5°	45°	0°	22.5°	45°	0°	22.5°	45°	0°	22.5°	45°	
15	20.3																		15
16	20.3																		16
17	20.3																		17
18	20.3			19.4															18
19	20.3			19.4															19
20	20.3			19.4															20
22	20.3			19.4			18.1												22
24	20.2			19.4			18.1												24
26	20.1			19.4			18.1			17.4									26
28	19.9			19.4			18.1			17.3			16.2						28
30	19.8			19.3			18.1			17.3			16.2						30
32	19.6			19.1			18.1			17.3			16.2			15.5			32
34	19.4			19			18			17.3			16.2			15.5			34
36	19.2			18.8			17.9			17.2			16.1			15.4			36
38	19			18.6			17.8			17.2			16.1			15.4			38
40	18.8			18.4			17.7			17.1			16			15.3			40
45	18.1	15.8		17.9			17.3			16.9			15.9			15.2			45
50	17.5	15.2		17.4			16.9			16.5			15.8			15.2			50
55	16.9	14.5		16.9	14.5		16.4	14.3		16.2			15.6			15			55
60	16.3	13.9		16.3	14		16	13.8		15.8	13.8		15.3			14.9			60
65	15.6	13.3	11.1	15.8	13.5		15.6	13.4		15.4	13.3		15	13.1		14.6	12.9		65
70	15	12.8	10.7	15.3	13		15.2	12.9		15	12.9		14.6	12.7		14.3	12.6		70
75	14.3	12.3	10.5	14.7	12.5	10.5	14.7	12.5	10.5	14.7	12.6		14.3	12.4		14	12.3		75
80	13.6	11.9	10.3	14.2	12.1	10.3	14.2	12.2	10.3	14.3	12.2	10.2	14	12.1	10.2	13.7	12.1		80
85	12.9	11.5	10.1	13.6	11.7	10.1	13.8	11.8	10.1	13.9	11.9	10.1	13.6	11.8	10	13.4	11.8	10	85
90	12.2	11.1	9.9	13	11.4	9.9	13.2	11.5	9.9	13.4	11.6	9.9	13.2	11.5	9.9	13.1	11.5	9.9	90
95	11.4	10.7	9.8	12.3	11	9.8	12.6	11.2	9.8	13	11.3	9.8	12.8	11.3	9.8	12.8	11.3	9.8	95
100	10.7	10.2	9.7	11.6	10.7	9.7	12	10.9	9.7	12.4	11	9.7	12.4	11	9.7	12.4	11	9.6	100
105	10.1	9.7	9.6	11	10.3	9.6	11.4	10.5	9.6	11.9	10.7	9.6	11.9	10.8	9.6	12	10.8	9.6	105
110	9.5	9.3	9.3	10.4	9.9	9.5	10.9	10.1	9.5	11.4	10.4	9.6	11.4	10.4	9.5	11.6	10.5	9.5	110
115	9	8.9	9	9.9	9.4	9.3	10.3	9.7	9.4	10.9	10	9.5	10.9	10.1	9.4	11.2	10.2	9.4	115
120	8.6	8.5	8.8	9.4	9.1	9.1	9.8	9.4	9.2	10.4	9.7	9.4	10.4	9.8	9.3	10.8	9.9	9.4	120
125	8.2	8.2		9	8.7	8.9	9.4	9.1	9	10	9.4	9.2	9.9	9.5	9.2	10.3	9.6	9.2	125
130	7.8	8.1		8.6	8.5	8.7	9	8.8	8.7	9.6	9.1	9	9.4	9.2	9	9.9	9.3	9.1	130
135				8.3	8.2		8.7	8.5	8.5	9.3	8.8	8.8	9	8.9	8.9	9.6	9.1	8.9	135
140				8	8		8.3	8.2	8.3	9	8.6	8.7	8.7	8.6	8.7	9.2	8.9	8.7	140
145				7.7			8.1	7.9		8.7	8.4	8.5	8.3	8.3	8.5	8.8	8.6	8.6	145
150							7.8	7.7		8.4	8.2	8.3	8	8	8.1	8.5	8.4	8.5	150
155							7.5	7.6		8.1	8		7.7	7.7	7.9	8.2	8.2	8.3	155
160										7.9	7.8		7.4	7.4	7.6	7.9	7.9	8	160
165										7.7	7.6		7.1	7.1		7.7	7.6	7.8	165
170										7.5	7.6		6.9	6.9		7.4	7.4	7.6	170
175													6.6	6.7		7.1	7.2	7.4	175
180													6.4	6.5		6.9	7		180
185													6.2			6.7	6.7		185
190																6.5	6.6		190
195																6.4	6.5		195
200																6.3			200

t_242_03400_00_000

Lifting capacities
Forces de levage

TVNZK

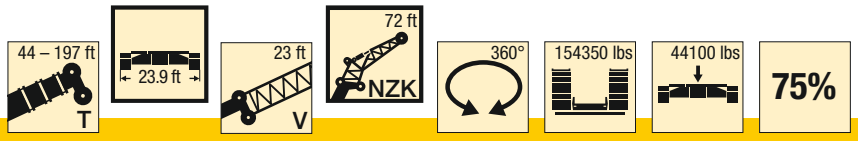

ft	128 ft + 23 ft			142 ft + 23 ft			156 ft + 23 ft			171 ft + 23 ft			185 ft + 23 ft			197 ft + 23 ft			ft
	72 ft			72 ft			72 ft			72 ft			72 ft			72 ft			
	0°	22.5°	45°	0°	22.5°	45°	0°	22.5°	45°	0°	22.5°	45°	0°	22.5°	45°	0°	22.5°	45°	
38	14.4																		38
40	14.4																		40
45	14.3			13.6			12.8												45
50	14.2			13.6			12.7												50
55	14.1			13.5			12.7			11.9			10.9						55
60	14.1			13.5			12.6			11.8			10.8			9.7			60
65	13.9			13.4			12.6			11.7			10.8			9.7			65
70	13.7			13.2			12.5			11.6			10.8			9.6			70
75	13.5	12.1		13.1	11.9		12.4			11.6			10.7			9.6			75
80	13.2	11.8		12.9	11.7		12.2	11.4		11.5			10.7			9.6			80
85	12.9	11.6		12.6	11.4		12.1	11.2		11.4	10.8		10.6			9.5			85
90	12.7	11.4		12.4	11.2		11.9	11		11.3	10.7		10.6			9.5			90
95	12.4	11.1	9.6	12.1	11	9.6	11.7	10.8		11.1	10.5		10.5	10		9.4	9		95
100	12.1	10.9	9.6	11.9	10.8	9.5	11.5	10.6	9.4	11	10.3		10.4	9.9		9.3	9		100
105	11.8	10.7	9.5	11.6	10.6	9.5	11.3	10.4	9.4	10.8	10.1	9.3	10.2	9.7		9.3	9		105
110	11.5	10.4	9.4	11.4	10.3	9.4	11	10.1	9.3	10.6	9.9	9.2	10.1	9.5		9.2	9		110
115	11.1	10.1	9.4	11.1	10.1	9.3	10.8	9.9	9.3	10.5	9.7	9.1	9.9	9.4	9	9.2	8.9	8.5	115
120	10.8	9.8	9.3	10.8	9.8	9.2	10.5	9.7	9.2	10.2	9.5	9	9.8	9.2	8.8	9.1	8.7	8.4	120
125	10.4	9.6	9.2	10.4	9.6	9.1	10.3	9.4	9	10	9.3	8.9	9.6	9	8.7	9	8.6	8.3	125
130	10	9.3	9	10.1	9.3	9	10	9.2	8.9	9.8	9.1	8.8	9.5	8.9	8.6	8.9	8.4	8.3	130
135	9.7	9.1	8.9	9.8	9.1	8.8	9.8	9	8.8	9.6	8.9	8.6	9.3	8.7	8.5	8.7	8.3	8.2	135
140	9.3	8.9	8.7	9.5	8.9	8.7	9.5	8.9	8.6	9.4	8.8	8.5	9.1	8.6	8.4	8.5	8.2	8.1	140
145	9	8.7	8.6	9.2	8.7	8.6	9.3	8.7	8.5	9.2	8.6	8.4	9	8.5	8.3	8.3	8.1	8	145
150	8.6	8.5	8.5	9	8.6	8.4	9	8.5	8.4	9	8.5	8.3	8.8	8.3	8.1	8.1	8	7.9	150
155	8.3	8.3	8.3	8.6	8.4	8.3	8.8	8.4	8.3	8.9	8.3	8.2	8.7	8.2	8.1	7.9	7.8	7.8	155
160	7.9	8	8.2	8.3	8.2	8.2	8.5	8.2	8.2	8.6	8.2	8.1	8.5	8	8	7.6	7.6	7.7	160
165	7.6	7.8	8	8	8.1	8.1	8.2	8.1	8.1	8.4	8	8	8.4	7.9	7.9	7.4	7.4	7.5	165
170	7.3	7.5	7.7	7.7	7.8	8	7.9	7.9	8	8.1	7.9	7.9	8.2	7.8	7.8	7.1	7.2	7.4	170
175	7	7.2	7.4	7.5	7.6	7.8	7.6	7.8	7.9	7.9	7.7	7.8	7.9	7.7	7.7	6.9	7	7.2	175
180	6.8	6.9	7.1	7.2	7.3	7.5	7.3	7.5	7.7	7.6	7.6	7.7	7.7	7.6	7.7	6.6	6.8	7	180
185	6.5	6.7		7	7.1	7.3	7.1	7.3	7.5	7.4	7.5	7.6	7.5	7.4	7.6	6.4	6.7	6.8	185
190	6.3	6.4		6.7	6.9	7	6.8	7	7.3	7.1	7.3	7.5	7.3	7.3	7.4	6.2	6.5	6.6	190
195	6.1	6.2		6.5	6.6	6.8	6.5	6.8	7	6.9	7.1	7.2	7	7.1	7.3	5.9	6.2	6.4	195
200	5.8	5.9		6.3	6.4		6.3	6.5	6.7	6.6	6.9	7	6.8	6.9	7.1	5.7	6	6.2	200
205	5.6	5.7		6.1	6.2		6	6.2	6.4	6.4	6.6	6.8	6.6	6.7	7	5.5	5.8	6	205
210	5.5	5.6		5.9	6		5.8	6	6.1	6.2	6.4	6.6	6.4	6.5	6.8	5.2	5.5	5.8	210
215	4.6			5.7	5.8		5.6	5.7	5.9	5.9	6.1	6.3	6.1	6.3	6.6	5	5.3	5.5	215
220				5.6	5.7		5.3	5.5		5.7	5.9	6.1	5.6	6.1	6.4	4.8	5.1	5.3	220
225				5.4			5.1	5.3		5.5	5.7	5.8	5.2	5.9	6.1	4.6	4.9	5.1	225
230							4.9	5.1		5.4	5.5	5.6	4.8	5.5	5.7	4.4	4.7	4.8	230
235							4.7			5.2	5.3		4.3	5	5.2	4	4.5	4.6	235
240							3.6			5	5.1		3.9	4.6	4.7	3.5	4.3	4.4	240
245										4.7	4.9		3.5	4.1		3.1	3.9	4.1	245
250										3.6			3.1	3.6		2.7	3.4	3.5	250
255													2.7	3.1		2.3	2.9		255
260													2.3	2.7		2	2.5		260
265																1.6	2.1		265
270																	1.7		270

t_242_03400_00_000

Lifting capacities
Forces de levage

TVNZK

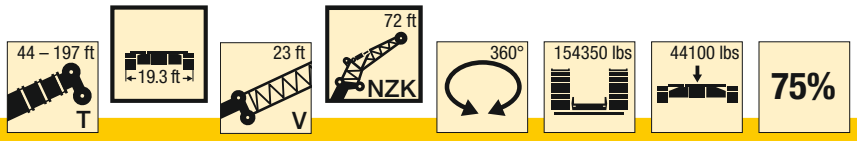

ft	44 ft + 23 ft			58 ft + 23 ft			72 ft + 23 ft			86 ft + 23 ft			100 ft + 23 ft			114 ft + 23 ft			ft
	72 ft			72 ft			72 ft			72 ft			72 ft			72 ft			
	0°	22.5°	45°	0°	22.5°	45°	0°	22.5°	45°	0°	22.5°	45°	0°	22.5°	45°	0°	22.5°	45°	
15	20.3																		15
16	20.3																		16
17	20.3																		17
18	20.3			19.4															18
19	20.3			19.4															19
20	20.3			19.4															20
22	20.3			19.4			18.1												22
24	20.2			19.4			18.1												24
26	20.1			19.4			18.1			17.4									26
28	19.9			19.4			18.1			17.3			16.2						28
30	19.8			19.3			18.1			17.3			16.2						30
32	19.6			19.1			18.1			17.3			16.2			15.5			32
34	19.4			19			18			17.3			16.2			15.5			34
36	19.2			18.8			17.9			17.2			16.1			15.4			36
38	19			18.6			17.8			17.2			16.1			15.4			38
40	18.8			18.4			17.7			17.1			16			15.3			40
45	18.1	15.8		17.9			17.3			16.9			15.9			15.2			45
50	17.5	15.2		17.4			16.9			16.5			15.8			15.2			50
55	16.9	14.5		16.9	14.5		16.4	14.3		16.2			15.6			15			55
60	16.3	13.9		16.3	14		16	13.8		15.8	13.8		15.3			14.9			60
65	15.6	13.3	11.1	15.8	13.5		15.6	13.4		15.4	13.3		15	13.1		14.6	12.9		65
70	15	12.8	10.7	15.3	13		15.2	12.9		15	12.9		14.6	12.7		14.3	12.6		70
75	14.3	12.3	10.5	14.7	12.5	10.5	14.7	12.5	10.5	14.7	12.6		14.3	12.4		14	12.3		75
80	13.6	11.9	10.3	14.2	12.1	10.3	14.2	12.2	10.3	14.3	12.2	10.2	14	12.1	10.2	13.7	12.1		80
85	12.9	11.5	10.1	13.6	11.7	10.1	13.8	11.8	10.1	13.9	11.9	10.1	13.6	11.8	10	13.4	11.8	10	85
90	12.2	11.1	9.9	13	11.4	9.9	13.2	11.5	9.9	13.4	11.6	9.9	13.2	11.5	9.9	13.1	11.5	9.9	90
95	11.4	10.7	9.8	12.3	11	9.8	12.6	11.2	9.8	13	11.3	9.8	12.8	11.3	9.8	12.8	11.3	9.8	95
100	10.7	10.2	9.7	11.6	10.7	9.7	12	10.9	9.7	12.4	11	9.7	12.4	11	9.7	12.4	11	9.6	100
105	10.1	9.7	9.6	11	10.3	9.6	11.4	10.5	9.6	11.9	10.7	9.6	11.9	10.8	9.6	12	10.8	9.6	105
110	9.5	9.3	9.3	10.4	9.9	9.5	10.9	10.1	9.5	11.4	10.4	9.6	11.4	10.4	9.5	11.6	10.5	9.5	110
115	9	8.9	9	9.9	9.4	9.3	10.3	9.7	9.4	10.9	10	9.5	10.9	10.1	9.4	11.2	10.2	9.4	115
120	8.6	8.5	8.8	9.4	9.1	9.1	9.8	9.4	9.2	10.4	9.7	9.4	10.4	9.8	9.3	10.8	9.9	9.4	120
125	8.2	8.2		9	8.7	8.9	9.4	9.1	9	10	9.4	9.2	9.9	9.5	9.2	10.3	9.6	9.2	125
130	7.8	8.1		8.6	8.5	8.7	9	8.8	8.7	9.6	9.1	9	9.4	9.2	9	9.9	9.3	9.1	130
135				8.3	8.2		8.7	8.5	8.5	9.3	8.8	8.8	9	8.9	8.9	9.6	9.1	8.9	135
140				8	8		8.3	8.2	8.3	9	8.6	8.7	8.7	8.6	8.7	9.2	8.9	8.7	140
145				7.7			8.1	7.9		8.7	8.4	8.5	8.3	8.3	8.5	8.8	8.6	8.6	145
150							7.8	7.7		8.4	8.2	8.3	8	8	8.1	8.5	8.4	8.5	150
155							7.5	7.6		8.1	8		7.7	7.7	7.9	8.2	8.2	8.3	155
160										7.9	7.8		7.4	7.4	7.6	7.9	7.9	8	160
165										7.7	7.6		7.1	7.1		7.7	7.6	7.8	165
170										7.5	7.6		6.9	6.9		7.4	7.4	7.6	170
175													6.6	6.7		7.1	7.2	7.4	175
180													6.4	6.5		6.9	7		180
185													6.2			6.7	6.7		185
190																6.5	6.6		190
195																6.4	6.5		195
200																6.3			200

t_242_03410_00_000

Lifting capacities
Forces de levage

TVNZK

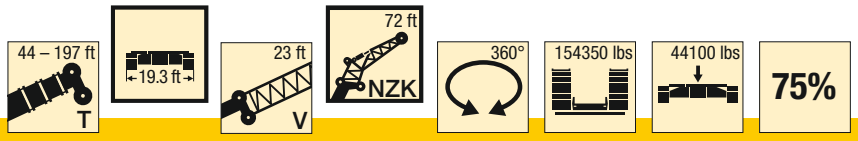

ft	128 ft + 23 ft			142 ft + 23 ft			156 ft + 23 ft			171 ft + 23 ft			185 ft + 23 ft			197 ft + 23 ft			ft
	72 ft			72 ft			72 ft			72 ft			72 ft			72 ft			
	0°	22.5°	45°	0°	22.5°	45°	0°	22.5°	45°	0°	22.5°	45°	0°	22.5°	45°	0°	22.5°	45°	
38	14.4																		38
40	14.4																		40
45	14.3			13.6			12.8												45
50	14.2			13.6			12.7												50
55	14.1			13.5			12.7			11.9			10.9						55
60	14.1			13.5			12.6			11.8			10.8			9.7			60
65	13.9			13.4			12.6			11.7			10.8			9.7			65
70	13.7			13.2			12.5			11.6			10.8			9.6			70
75	13.5	12.1		13.1	11.9		12.4			11.6			10.7			9.6			75
80	13.2	11.8		12.9	11.7		12.2	11.4		11.5			10.7			9.6			80
85	12.9	11.6		12.6	11.4		12.1	11.2		11.4	10.8		10.6			9.5			85
90	12.7	11.4		12.4	11.2		11.9	11		11.3	10.7		10.6			9.5			90
95	12.4	11.1	9.6	12.1	11	9.6	11.7	10.8		11.1	10.5		10.5	10		9.4	9		95
100	12.1	10.9	9.6	11.9	10.8	9.5	11.5	10.6	9.4	11	10.3		10.4	9.9		9.3	9		100
105	11.8	10.7	9.5	11.6	10.6	9.5	11.3	10.4	9.4	10.8	10.1	9.3	10.2	9.7		9.3	9		105
110	11.5	10.4	9.4	11.4	10.3	9.4	11	10.1	9.3	10.6	9.9	9.2	10.1	9.5		9.2	9		110
115	11.1	10.1	9.4	11.1	10.1	9.3	10.8	9.9	9.3	10.5	9.7	9.1	9.9	9.4	9	9.2	8.9	8.5	115
120	10.8	9.8	9.3	10.8	9.8	9.2	10.5	9.7	9.2	10.2	9.5	9	9.8	9.2	8.8	9.1	8.7	8.4	120
125	10.4	9.6	9.2	10.4	9.6	9.1	10.3	9.4	9	10	9.3	8.9	9.6	9	8.7	9	8.6	8.3	125
130	10	9.3	9	10.1	9.3	9	10	9.2	8.9	9.8	9.1	8.8	9.5	8.9	8.6	8.9	8.4	8.3	130
135	9.7	9.1	8.9	9.8	9.1	8.8	9.8	9	8.8	9.6	8.9	8.6	9.3	8.7	8.5	8.7	8.3	8.2	135
140	9.3	8.9	8.7	9.5	8.9	8.7	9.5	8.9	8.6	9.4	8.8	8.5	9.1	8.6	8.4	8.5	8.2	8.1	140
145	9	8.7	8.6	9.2	8.7	8.6	9.3	8.7	8.5	9.2	8.6	8.4	9	8.5	8.3	8.3	8.1	8	145
150	8.6	8.5	8.5	9	8.6	8.4	9	8.5	8.4	9	8.5	8.3	8.8	8.3	8.1	8.1	8	7.9	150
155	8.3	8.3	8.3	8.6	8.4	8.3	8.8	8.4	8.3	8.9	8.3	8.2	8.7	8.2	8.1	7.9	7.8	7.8	155
160	7.9	8	8.2	8.3	8.2	8.2	8.5	8.2	8.2	8.6	8.2	8.1	8.5	8	8	7.6	7.6	7.7	160
165	7.6	7.8	8	8	8.1	8.1	8.2	8.1	8.1	8.4	8	8	8.4	7.9	7.9	7.4	7.4	7.5	165
170	7.3	7.5	7.7	7.7	7.8	8	7.9	7.9	8	8.1	7.9	7.9	8.2	7.8	7.8	7.1	7.2	7.4	170
175	7	7.2	7.4	7.5	7.6	7.8	7.6	7.8	7.9	7.9	7.7	7.8	7.7	7.7	7.7	6.8	7	7.2	175
180	6.8	6.9	7.1	7.2	7.3	7.5	7.3	7.5	7.7	7.6	7.6	7.7	7	7.6	7.7	6.5	6.8	7	180
185	6.5	6.7		7	7.1	7.3	7.1	7.3	7.5	7.3	7.5	7.6	6.3	7.4	7.6	5.9	6.7	6.8	185
190	6.3	6.4		6.7	6.9	7	6.8	7	7.3	6.9	7.3	7.5	5.7	7.1	7.4	5.3	6.5	6.6	190
195	6.1	6.2		6.5	6.6	6.8	6.5	6.8	7	6.3	7.1	7.2	5.1	6.5	7.1	4.8	6	6.4	195
200	5.8	5.9		6.3	6.4		6.3	6.5	6.7	5.7	6.8	7	4.5	5.8	6.6	4.2	5.6	6.2	200
205	5.6	5.7		6.1	6.2		6	6.2	6.4	5.2	6.2	6.7	4	5.2	5.9	3.7	5	5.7	205
210	5.5	5.6		5.9	6		5.7	6	6.1	4.7	5.6	6.1	3.5	4.6	5.2	3.2	4.4	5.1	210
215	4.6			5.7	5.8		5.2	5.7	5.9	4.2	5.1	5.4	3	4.1	4.6	2.7	3.9	4.5	215
220				5.6	5.7		4.7	5.3		3.8	4.6	4.8	2.6	3.5	4	2.3	3.3	3.9	220
225				5.4			4.3	4.8		3.3	4	4.2	2.1	3	3.4	1.8	2.8	3.3	225
230							3.9	4.3		2.9	3.6	3.6	1.7	2.6	2.8		2.3	2.8	230
235							3.5			2.5	3.1			2.1	2.3		1.9	2.2	235
240							3.2			2.2	2.6			1.6	1.8			1.7	240
245										1.8	2.2								245
250										1.5									250

t_242_03410_00_000

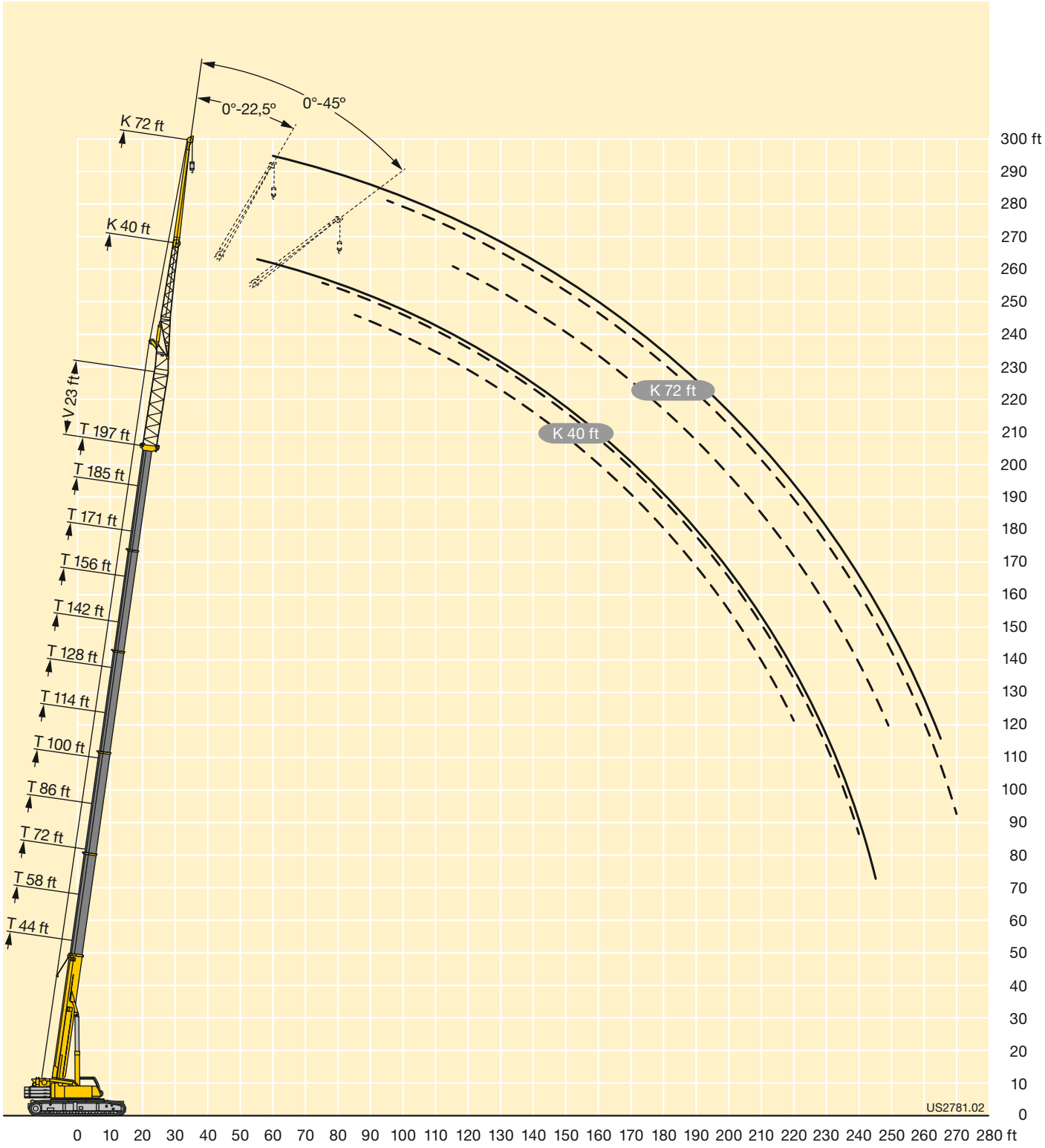
0°-22,5°
0°-45°
K 72 ft
K 40 ft
V 23 ft
T 197 ft
T 185 ft
T 171 ft
T 156 ft
T 142 ft
T 128 ft
T 114 ft
T 100 ft
T 86 ft
T 72 ft
T 58 ft
T 44 ft
K 72 ft
K 40 ft
300 ft
290
280
270
260
250
240
230
220
210
200
190
180
170
160
150
140
130
120
110
100
90
80
70
60
50
40
30
20
10
0
0 10 20 30 40 50 60 70 80 90 100 110 120 130 140 150 160 170 180 190 200 210 220 230 240 250 260 270 280 ft
US2781.02

Lifting capacities
Forces de levage

TVNZK

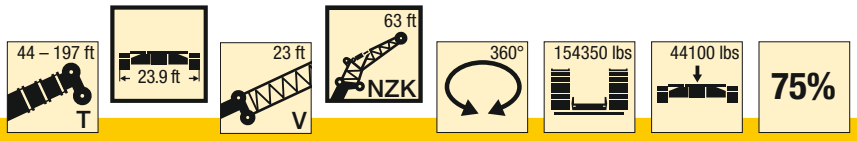

ft	44 ft + 23 ft			58 ft + 23 ft			72 ft + 23 ft			86 ft + 23 ft			100 ft + 23 ft			114 ft + 23 ft			ft
	63 ft			63 ft			63 ft			63 ft			63 ft			63 ft			
	0°	22.5°	45°	0°	22.5°	45°	0°	22.5°	45°	0°	22.5°	45°	0°	22.5°	45°	0°	22.5°	45°	
15	35																		15
16	35																		16
17	34.9																		17
18	34.9																		18
19	34.9			31.9															19
20	34.8			31.9															20
22	34.7			31.9			28.4												22
24	34.5			31.8			28.3												24
26	34.2			31.8			28.3			26.3									26
28	33.5			31.6			28.3			26.3									28
30	32.6			31.3			28.3			26.3									30
32	31.6			30.9			28.2			26.3			23.8			21.1			32
34	30.6			30.1			27.9			26.2			23.7			21.1			34
36	29.6			29.3			27.5			26.2			23.7			21			36
38	28.6	23.4		28.5			27.1			25.9			23.6			21			38
40	27.6	22.8		27.7			26.5			25.5			23.5			20.9			40
45	25.4	21.4		25.8	22.2		25			24.4			22.9			20.7			45
50	23.4	20.1		24	20.8		23.5			23.2			22.1			20.5			50
55	21.6	18.9		22.4	19.6		22.1	19.1		22.1	18.9		21.2			20.1			55
60	19.9	17.7	15.4	20.8	18.4	15.4	20.8	18.1		20.9	18		20.3	17.4		19.6	17.1		60
65	18.4	16.4	14.9	19.4	17.4	14.9	19.6	17.2	14.8	19.8	17.2		19.4	16.7		18.9	16.4		65
70	16.9	15.3	14.4	18.1	16.4	14.5	18.5	16.4	14.4	18.8	16.4		18.5	16		18.2	15.8		70
75	15.7	14.3	13.9	16.9	15.5	14.1	17.3	15.6	14	17.8	15.7	14	17.6	15.4	13.9	17.5	15.3		75
80	14.5	13.4	13.2	15.7	14.7	13.5	16.2	14.8	13.5	16.8	15	13.6	16.7	14.8	13.4	16.9	14.7	13.3	80
85	13.5	12.6	12.5	14.7	13.9	12.9	15.3	14.1	13	15.9	14.4	13.1	15.9	14.3	12.9	16.2	14.2	12.8	85
90	12.6	11.8	11.8	13.8	13.1	12.3	14.3	13.4	12.4	15.1	13.7	12.6	15	13.7	12.5	15.6	13.7	12.4	90
95	11.7	11.1	11.3	12.9	12.4	11.8	13.4	12.7	12	14.3	13.2	12.1	14.1	13.1	12.1	14.9	13.2	12.1	95
100	10.9	10.5	10.8	12.2	11.8	11.3	12.7	12.1	11.5	13.6	12.6	11.7	13.3	12.6	11.7	14.1	12.7	11.7	100
105	10.3	9.9	10.3	11.5	11.2	10.9	11.9	11.5	11	12.9	12.1	11.3	12.6	12.2	11.3	13.4	12.3	11.4	105
110	9.6	9.5	10	10.8	10.7	10.5	11.3	10.9	10.6	12.3	11.5	11	11.9	11.7	11	12.7	11.9	11.1	110
115	9.2	9.1	5.2	10.2	10.2	10.1	10.7	10.4	10.2	11.7	11.1	10.6	11.2	11.2	10.7	12.1	11.5	10.8	115
120	8.7	8.8		9.7	9.8	9.9	10.1	9.9	9.8	11.1	10.6	10.3	10.6	10.6	10.4	11.5	11.1	10.5	120
125				9.2	9.4		9.7	9.5	9.5	10.6	10.2	10	10	10.1	10.1	10.9	10.6	10.3	125
130				8.9	9.1		9.2	9.2	9.3	10.1	9.8	9.7	9.6	9.7	9.7	10.4	10.2	10	130
135				8.5			8.9	8.9		9.7	9.5	9.5	9.2	9.3	9.4	9.9	9.8	9.7	135
140							8.5	8.6		9.3	9.2	9.3	8.8	8.9	9	9.5	9.4	9.4	140
145							8.2	8.3		9	8.9		8.4	8.5	8.6	9.2	9	9.1	145
150							8			8.7	8.7		8.1	8.2	8.3	8.8	8.7	8.8	150
155										8.5	8.5		7.8	7.9	8	8.5	8.4	8.5	155
160										8.3	8.4		7.5	7.6		8.2	8.2	8.3	160
165													7.2	7.3		7.9	7.9	8	165
170													7	7.1		7.6	7.6		170
175													6.8	6.9		7.4	7.4		175
180																7.2	7.2		180
185																7	7		185
190																6.8			190

t_242_02400_00_000

Lifting capacities
Forces de levage

TVNZK

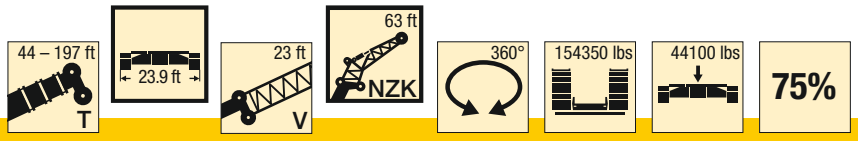

ft	128 ft + 23 ft			142 ft + 23 ft			156 ft + 23 ft			171 ft + 23 ft			185 ft + 23 ft			197 ft + 23 ft			ft
	63 ft			63 ft			63 ft			63 ft			63 ft			63 ft			
	0°	22.5°	45°	0°	22.5°	45°	0°	22.5°	45°	0°	22.5°	45°	0°	22.5°	45°	0°	22.5°	45°	
38	19.1																		38
40	19.1																		40
45	18.9			17.8			16.4												45
50	18.8			17.6			16.3												50
55	18.6			17.5			16.2			14.9			13.5						55
60	18.4			17.4			16			14.8			13.4			11.7			60
65	17.9	15.8		17.2			15.9			14.7			13.3			11.7			65
70	17.4	15.3		16.9			15.8			14.6			13.2			11.5			70
75	16.9	14.8		16.4	14.6		15.5	14		14.5			13.2			11.4			75
80	16.3	14.4		16	14.1		15.2	13.7		14.3	13.2		13.1			11.3			80
85	15.8	13.9	12.6	15.5	13.7	12.4	14.9	13.3		14.1	12.9		13	12.1		11.1	10.4		85
90	15.2	13.5	12.2	15	13.3	12.1	14.5	12.9		13.9	12.6		12.8	11.9		11	10.4		90
95	14.6	13	11.9	14.6	12.9	11.8	14.1	12.6	11.6	13.5	12.2		12.6	11.7		11	10.4		95
100	14.1	12.6	11.6	14.1	12.5	11.5	13.7	12.2	11.3	13.2	11.9	11.1	12.5	11.5	10.7	10.9	10.4		100
105	13.5	12.2	11.3	13.6	12.1	11.2	13.3	11.9	11	12.9	11.6	10.8	12.2	11.2	10.5	10.8	10.3	9.5	105
110	12.9	11.8	11	13.1	11.8	11	12.9	11.6	10.8	12.5	11.3	10.6	11.9	10.9	10.3	10.6	10.1	9.4	110
115	12.3	11.4	10.7	12.6	11.4	10.7	12.4	11.3	10.5	12.2	11.1	10.4	11.7	10.7	10.1	10.4	9.9	9.3	115
120	11.7	11.1	10.5	12	11.1	10.5	12	11	10.3	11.9	10.8	10.2	11.4	10.5	9.9	10.1	9.8	9.2	120
125	11.1	10.7	10.2	11.5	10.8	10.2	11.5	10.7	10.1	11.5	10.5	10	11.1	10.2	9.8	9.8	9.6	9.1	125
130	10.6	10.3	10	11	10.4	10	11.1	10.4	9.9	11.2	10.2	9.8	10.9	10	9.6	9.6	9.4	9	130
135	10	10	9.8	10.5	10.1	9.8	10.6	10.1	9.8	10.8	10	9.6	10.6	9.8	9.5	9.3	9.1	8.9	135
140	9.6	9.6	9.6	10.1	9.8	9.7	10.2	9.8	9.6	10.4	9.8	9.5	10.3	9.6	9.3	9	8.9	8.8	140
145	9.2	9.3	9.3	9.6	9.5	9.5	9.8	9.6	9.4	10	9.6	9.4	9.9	9.4	9.2	8.7	8.7	8.6	145
150	8.8	8.9	9	9.2	9.2	9.2	9.5	9.3	9.3	9.6	9.3	9.2	9.6	9.2	9.1	8.4	8.4	8.4	150
155	8.4	8.5	8.7	8.9	8.9	9	9.1	9	9.1	9.3	9.1	9.1	9.3	9.1	9	8.2	8.2	8.3	155
160	8.1	8.2	8.4	8.6	8.6	8.7	8.8	8.8	8.9	9	8.9	8.9	9	8.8	8.9	7.9	7.9	8	160
165	7.7	7.9	8.1	8.2	8.3	8.5	8.4	8.5	8.6	8.7	8.7	8.7	8.7	8.7	8.7	7.6	7.7	7.8	165
170	7.5	7.6	7.7	7.9	8	8.2	8.1	8.2	8.4	8.4	8.4	8.5	8.5	8.5	8.5	7.3	7.5	7.6	170
175	7.1	7.3	7.4	7.7	7.7	7.9	7.7	8	8.1	8.1	8.2	8.3	8.2	8.2	8.4	7	7.3	7.4	175
180	6.9	7		7.4	7.5	7.6	7.4	7.7	7.9	7.8	7.9	8.1	8	8	8.2	6.8	7	7.2	180
185	6.6	6.7		7.1	7.2	7.4	7.1	7.4	7.6	7.5	7.7	7.9	7.7	7.8	7.9	6.5	6.8	7	185
190	6.4	6.5		6.9	7	7.1	6.8	7.1	7.3	7.3	7.4	7.6	7.4	7.6	7.7	6.3	6.5	6.7	190
195	6.1	6.2		6.6	6.7		6.6	6.8	6.9	7	7.2	7.4	7.2	7.3	7.5	6	6.3	6.5	195
200	6	6.1		6.4	6.5		6.3	6.5	6.6	6.8	6.9	7.1	6.9	7.1	7.3	5.8	6	6.2	200
205	5.8			6.2	6.3		6.1	6.2	6.4	6.5	6.7	6.8	6.7	6.9	7.1	5.5	5.8	6	205
210				6.1	6.1		5.8	6	6.1	6.3	6.4	6.5	6.3	6.7	6.8	5.3	5.6	5.7	210
215				5.9	6		5.6	5.7		6	6.2	6.3	5.8	6.4	6.6	5.1	5.3	5.5	215
220				3.5			5.3	5.5		5.8	5.9	6.1	5.3	6	6.2	4.9	5.1	5.3	220
225							5.1	5.2		5.6	5.8		4.9	5.5	5.7	4.6	4.9	5	225
230							4.6			5.4	5.5		4.4	5	5.1	4.1	4.7	4.8	230
235										5.1	5.4		4	4.5	4.6	3.6	4.3	4.5	235
240										4.4	5		3.5	4		3.2	3.8	4	240
245										2.1			3.1	3.5		2.8	3.3	3.4	245
250													2.7	3		2.4	2.9		250
255													1.7			2	2.4		255
260																1.6			260

t_242_02400_00_000

Lifting capacities
Forces de levage

TVNZK

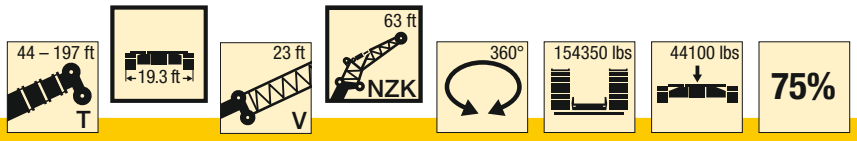

ft	44 ft + 23 ft			58 ft + 23 ft			72 ft + 23 ft			86 ft + 23 ft			100 ft + 23 ft			114 ft + 23 ft			ft
	63 ft			63 ft			63 ft			63 ft			63 ft			63 ft			
	0°	22.5°	45°	0°	22.5°	45°	0°	22.5°	45°	0°	22.5°	45°	0°	22.5°	45°	0°	22.5°	45°	
15	35																		15
16	35																		16
17	34.9																		17
18	34.9																		18
19	34.9			31.9															19
20	34.8			31.9															20
22	34.7			31.9			28.4												22
24	34.5			31.8			28.3												24
26	34.2			31.8			28.3			26.3									26
28	33.5			31.6			28.3			26.3									28
30	32.6			31.3			28.3			26.3									30
32	31.6			30.9			28.2			26.3			23.8			21.1			32
34	30.6			30.1			27.9			26.2			23.7			21.1			34
36	29.6			29.3			27.5			26.2			23.7			21			36
38	28.6	23.4		28.5			27.1			25.9			23.6			21			38
40	27.6	22.8		27.7			26.5			25.5			23.5			20.9			40
45	25.4	21.4		25.8	22.2		25			24.4			22.9			20.7			45
50	23.4	20.1		24	20.8		23.5			23.2			22.1			20.5			50
55	21.6	18.9		22.4	19.6		22.1	19.1		22.1	18.9		21.2			20.1			55
60	19.9	17.7	15.4	20.8	18.4	15.4	20.8	18.1		20.9	18		20.3	17.4		19.6	17.1		60
65	18.4	16.4	14.9	19.4	17.4	14.9	19.6	17.2	14.8	19.8	17.2		19.4	16.7		18.9	16.4		65
70	16.9	15.3	14.4	18.1	16.4	14.5	18.5	16.4	14.4	18.8	16.4		18.5	16		18.2	15.8		70
75	15.7	14.3	13.9	16.9	15.5	14.1	17.3	15.6	14	17.8	15.7	14	17.6	15.4	13.9	17.5	15.3		75
80	14.5	13.4	13.2	15.7	14.7	13.5	16.2	14.8	13.5	16.8	15	13.6	16.7	14.8	13.4	16.9	14.7	13.3	80
85	13.5	12.6	12.5	14.7	13.9	12.9	15.3	14.1	13	15.9	14.4	13.1	15.9	14.3	12.9	16.2	14.2	12.8	85
90	12.6	11.8	11.8	13.8	13.1	12.3	14.3	13.4	12.4	15.1	13.7	12.6	15	13.7	12.5	15.6	13.7	12.4	90
95	11.7	11.1	11.3	12.9	12.4	11.8	13.4	12.7	12	14.3	13.2	12.1	14.1	13.1	12.1	14.9	13.2	12.1	95
100	10.9	10.5	10.8	12.2	11.8	11.3	12.7	12.1	11.5	13.6	12.6	11.7	13.3	12.6	11.7	14.1	12.7	11.7	100
105	10.3	9.9	10.3	11.5	11.2	10.9	11.9	11.5	11	12.9	12.1	11.3	12.6	12.2	11.3	13.4	12.3	11.4	105
110	9.6	9.5	10	10.8	10.7	10.5	11.3	10.9	10.6	12.3	11.5	11	11.9	11.7	11	12.7	11.9	11.1	110
115	9.2	9.1	5.2	10.2	10.2	10.1	10.7	10.4	10.2	11.7	11.1	10.6	11.2	11.2	10.7	12.1	11.5	10.8	115
120	8.7	8.8		9.7	9.8	9.9	10.1	9.9	9.8	11.1	10.6	10.3	10.6	10.6	10.4	11.5	11.1	10.5	120
125				9.2	9.4		9.7	9.5	9.5	10.6	10.2	10	10	10.1	10.1	10.9	10.6	10.3	125
130				8.9	9.1		9.2	9.2	9.3	10.1	9.8	9.7	9.6	9.7	9.7	10.4	10.2	10	130
135				8.5			8.9	8.9		9.7	9.5	9.5	9.2	9.3	9.4	9.9	9.8	9.7	135
140							8.5	8.6		9.3	9.2	9.3	8.8	8.9	9	9.5	9.4	9.4	140
145							8.2	8.3		9	8.9		8.4	8.5	8.6	9.2	9	9.1	145
150							8			8.7	8.7		8.1	8.2	8.3	8.8	8.7	8.8	150
155										8.5	8.5		7.8	7.9	8	8.5	8.4	8.5	155
160										8.3	8.4		7.5	7.6		8.2	8.2	8.3	160
165													7.2	7.3		7.9	7.9	8	165
170													7	7.1		7.6	7.6		170
175													6.8	6.9		7.4	7.4		175
180																7.2	7.2		180
185																7	7		185
190																6.8			190

t_242_02410_00_000

Lifting capacities
Forces de levage

TVNZK

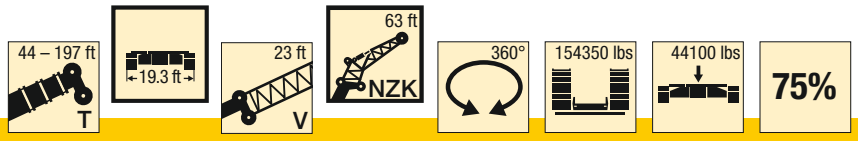

ft	128 ft + 23 ft			142 ft + 23 ft			156 ft + 23 ft			171 ft + 23 ft			185 ft + 23 ft			197 ft + 23 ft			ft
	63 ft			63 ft			63 ft			63 ft			63 ft			63 ft			
	0°	22.5°	45°	0°	22.5°	45°	0°	22.5°	45°	0°	22.5°	45°	0°	22.5°	45°	0°	22.5°	45°	
38	19.1																		38
40	19.1																		40
45	18.9			17.8			16.4												45
50	18.8			17.6			16.3												50
55	18.6			17.5			16.2			14.9			13.5						55
60	18.4			17.4			16			14.8			13.4			11.7			60
65	17.9	15.8		17.2			15.9			14.7			13.3			11.7			65
70	17.4	15.3		16.9			15.8			14.6			13.2			11.5			70
75	16.9	14.8		16.4	14.6		15.5	14		14.5			13.2			11.4			75
80	16.3	14.4		16	14.1		15.2	13.7		14.3	13.2		13.1			11.3			80
85	15.8	13.9	12.6	15.5	13.7	12.4	14.9	13.3		14.1	12.9		13	12.1		11.1	10.4		85
90	15.2	13.5	12.2	15	13.3	12.1	14.5	12.9		13.9	12.6		12.8	11.9		11	10.4		90
95	14.6	13	11.9	14.6	12.9	11.8	14.1	12.6	11.6	13.5	12.2		12.6	11.7		11	10.4		95
100	14.1	12.6	11.6	14.1	12.5	11.5	13.7	12.2	11.3	13.2	11.9	11.1	12.5	11.5	10.7	10.9	10.4		100
105	13.5	12.2	11.3	13.6	12.1	11.2	13.3	11.9	11	12.9	11.6	10.8	12.2	11.2	10.5	10.8	10.3	9.5	105
110	12.9	11.8	11	13.1	11.8	11	12.9	11.6	10.8	12.5	11.3	10.6	11.9	10.9	10.3	10.6	10.1	9.4	110
115	12.3	11.4	10.7	12.6	11.4	10.7	12.4	11.3	10.5	12.2	11.1	10.4	11.7	10.7	10.1	10.4	9.9	9.3	115
120	11.7	11.1	10.5	12	11.1	10.5	12	11	10.3	11.9	10.8	10.2	11.4	10.5	9.9	10.1	9.8	9.2	120
125	11.1	10.7	10.2	11.5	10.8	10.2	11.5	10.7	10.1	11.5	10.5	10	11.1	10.2	9.8	9.8	9.6	9.1	125
130	10.6	10.3	10	11	10.4	10	11.1	10.4	9.9	11.2	10.2	9.8	10.9	10	9.6	9.6	9.4	9	130
135	10	10	9.8	10.5	10.1	9.8	10.6	10.1	9.8	10.8	10	9.6	10.6	9.8	9.5	9.3	9.1	8.9	135
140	9.6	9.6	9.6	10.1	9.8	9.7	10.2	9.8	9.6	10.4	9.8	9.5	10.3	9.6	9.3	9	8.9	8.8	140
145	9.2	9.3	9.3	9.6	9.5	9.5	9.8	9.6	9.4	10	9.6	9.4	9.9	9.4	9.2	8.7	8.7	8.6	145
150	8.8	8.9	9	9.2	9.2	9.2	9.5	9.3	9.3	9.6	9.3	9.2	9.6	9.2	9.1	8.4	8.4	8.4	150
155	8.4	8.5	8.7	8.9	8.9	9	9.1	9	9.1	9.3	9.1	9.1	9.3	9.1	9	8.2	8.2	8.3	155
160	8.1	8.2	8.4	8.6	8.6	8.7	8.8	8.8	8.9	9	8.9	8.9	9	8.8	8.9	7.9	7.9	8	160
165	7.7	7.9	8.1	8.2	8.3	8.5	8.4	8.5	8.6	8.7	8.7	8.7	8.7	8.7	8.7	7.6	7.7	7.8	165
170	7.5	7.6	7.7	7.9	8	8.2	8.1	8.2	8.4	8.4	8.4	8.5	8.1	8.5	8.5	7.3	7.5	7.6	170
175	7.1	7.3	7.4	7.7	7.7	7.9	7.7	8	8.1	8.1	8.2	8.3	7.4	8.2	8.4	6.9	7.3	7.4	175
180	6.9	7		7.4	7.5	7.6	7.4	7.7	7.9	7.7	7.9	8.1	6.6	7.9	8.2	6.3	7	7.2	180
185	6.6	6.7		7.1	7.2	7.4	7.1	7.4	7.6	7.2	7.7	7.9	6	7.3	7.8	5.7	6.7	7	185
190	6.4	6.5		6.9	7	7.1	6.8	7.1	7.3	6.5	7.4	7.6	5.4	6.6	7.3	5.1	6.3	6.7	190
195	6.1	6.2		6.6	6.7		6.6	6.8	6.9	6	6.9	7.3	4.8	5.9	6.5	4.5	5.7	6.3	195
200	6	6.1		6.4	6.5		6.3	6.5	6.6	5.4	6.3	6.7	4.2	5.3	5.8	3.9	5	5.7	200
205	5.8			6.2	6.3		5.8	6.2	6.4	4.9	5.7	6	3.7	4.6	5.1	3.4	4.4	5	205
210				6.1	6.1		5.3	5.9	5.9	4.3	5.1	5.3	3.1	4.1	4.5	2.9	3.9	4.4	210
215				5.9	6		4.9	5.3		3.9	4.5	4.7	2.7	3.5	3.9	2.4	3.3	3.8	215
220				3.5			4.4	4.8		3.4	4	4.1	2.2	3	3.3	1.9	2.8	3.2	220
225							4	4.3		3	3.5		1.8	2.5	2.7	1.3	2.3	2.6	225
230							3.6			2.6	3			2	2.1		1.8	2.1	230
235										2.2	2.6			1.5	1.5			1.5	235
240										1.8	2.1								240
245										1.5									245

t_242_02410_00_000

Lifting capacities
Forces de levage

TVNZK

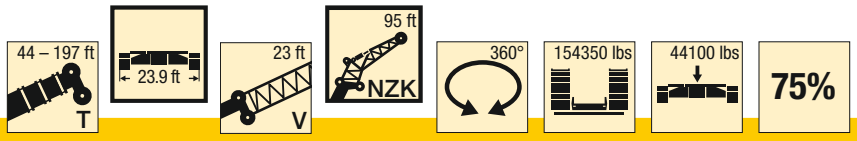

ft	44 ft + 23 ft			58 ft + 23 ft			72 ft + 23 ft			86 ft + 23 ft			100 ft + 23 ft			114 ft + 23 ft			ft
	95 ft			95 ft			95 ft			95 ft			95 ft			95 ft			
	0°	22.5°	45°	0°	22.5°	45°	0°	22.5°	45°	0°	22.5°	45°	0°	22.5°	45°	0°	22.5°	45°	
22	15.2																		22
24	15.2																		24
26	15.2			14.4															26
28	15.1			14.4			13.4												28
30	15.1			14.4			13.3												30
32	15.1			14.3			13.3			12.7									32
34	15			14.3			13.3			12.6			11.8						34
36	15			14.2			13.2			12.6			11.7						36
38	14.9			14.2			13.2			12.5			11.7			11.2			38
40	14.8			14.1			13.1			12.5			11.7			11.1			40
45	14.5			14			13			12.4			11.6			11.1			45
50	14			13.7			12.9			12.4			11.5			11			50
55	13.5			13.3			12.7			12.3			11.5			10.9			55
60	12.9	10.6		12.8			12.3			12.1			11.4			10.9			60
65	12.3	10.1		12.3	10		12	9.8		11.8			11.2			10.8			65
70	11.7	9.6		11.8	9.6		11.6	9.5		11.4			11			10.7			70
75	11.1	9.2		11.3	9.2		11.2	9.1		11.1	9.1		10.7			10.5			75
80	10.6	8.8		10.8	8.9		10.7	8.8		10.7	8.8		10.4	8.7		10.2	8.6		80
85	10	8.5	7.1	10.3	8.6		10.3	8.5		10.3	8.5		10.1	8.4		10	8.4		85
90	9.5	8.1	6.9	9.8	8.3		9.9	8.3		10	8.3		9.8	8.2		9.7	8.2		90
95	9.1	7.8	6.7	9.4	8	6.7	9.5	8	6.7	9.6	8		9.5	8		9.4	8		95
100	8.7	7.6	6.5	9	7.7	6.6	9.1	7.8	6.6	9.3	7.8	6.5	9.2	7.8	6.5	9.2	7.8		100
105	8.3	7.3	6.4	8.7	7.5	6.4	8.8	7.5	6.4	9	7.6	6.4	9	7.6	6.4	8.9	7.6	6.3	105
110	7.9	7.1	6.3	8.3	7.2	6.3	8.5	7.3	6.3	8.7	7.4	6.3	8.7	7.4	6.3	8.7	7.4	6.3	110
115	7.6	6.8	6.2	8	7	6.2	8.2	7.1	6.2	8.4	7.2	6.2	8.4	7.2	6.2	8.5	7.2	6.2	115
120	7.2	6.7	6.1	7.7	6.8	6.1	7.9	6.9	6.1	8.1	7	6.1	8.2	7.1	6.1	8.3	7.1	6.1	120
125	6.9	6.5	6	7.4	6.6	6	7.6	6.8	6.1	7.9	6.9	6.1	7.9	6.9	6	8	6.9	6	125
130	6.5	6.3	6	7	6.5	6	7.3	6.6	6	7.6	6.7	6	7.7	6.8	6	7.8	6.8	5.9	130
135	6.2	6.1	6	6.7	6.4	6	7	6.5	5.9	7.3	6.6	5.9	7.4	6.6	5.9	7.6	6.7	5.9	135
140	6	5.9	6	6.4	6.2	6	6.8	6.3	5.9	7.1	6.4	5.9	7.2	6.5	5.9	7.4	6.5	5.8	140
145	5.7	5.7	6	6.2	6	6	6.5	6.2	5.9	6.8	6.3	5.9	7	6.4	5.8	7.1	6.4	5.8	145
150	5.4	5.5		5.9	5.8	6	6.3	6.1	5.9	6.6	6.2	5.8	6.7	6.2	5.8	6.9	6.3	5.8	150
155				5.7	5.7	6	6.1	5.9	5.9	6.4	6.1	5.8	6.5	6.1	5.8	6.7	6.2	5.8	155
160				5.5	5.5		5.8	5.7	5.9	6.2	5.9	5.8	6.3	6	5.8	6.5	6.1	5.7	160
165				5.3	5.4		5.6	5.6		5.9	5.8	5.8	6.1	5.9	5.8	6.3	6	5.7	165
170							5.4	5.5		5.8	5.6	5.8	5.9	5.7	5.8	6.2	5.8	5.7	170
175							5.3	5.4		5.6	5.5	5.8	5.7	5.6	5.7	6	5.7	5.7	175
180							5.2			5.4	5.4		5.5	5.5	5.7	5.8	5.6	5.7	180
185										5.3	5.3		5.3	5.3	5.5	5.7	5.5	5.7	185
190										5.2	5.3		5.1	5.2		5.5	5.4	5.6	190
195										5.1			4.9	5		5.3	5.3	5.5	195
200													4.7	4.8		5.1	5.2	5.4	200
205													4.6	4.7		5	5		205
210													4.5			4.8	4.9		210
215																4.7	4.8		215
220																4.6	4.7		220

t_242_05400_00_000

Lifting capacities
Forces de levage

TVNZK

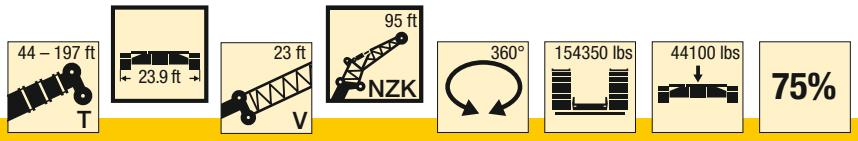

ft	128 ft + 23 ft			142 ft + 23 ft			156 ft + 23 ft			171 ft + 23 ft			185 ft + 23 ft			197 ft + 23 ft			ft
	95 ft			95 ft			95 ft			95 ft			95 ft			95 ft			
	0°	22.5°	45°	0°	22.5°	45°	0°	22.5°	45°	0°	22.5°	45°	0°	22.5°	45°	0°	22.5°	45°	
45	10.3			9.9															45
50	10.3			9.8															50
55	10.2			9.8			9.2												55
60	10.2			9.7			9.2			8.6			8						60
65	10.1			9.6			9.1			8.6			8			7.2			65
70	10			9.6			9.1			8.5			8			7.2			70
75	9.9			9.5			9			8.5			7.9			7.1			75
80	9.8			9.5			9			8.4			7.9			7.1			80
85	9.6	8.2		9.4			8.9			8.4			7.9			7			85
90	9.4	8		9.2			8.9	7.8		8.3			7.8			6.9			90
95	9.2	7.8		9	7.8		8.8	7.6		8.3			7.8			6.8			95
100	9	7.7		8.9	7.6		8.6	7.5		8.2	7.3		7.7			6.8			100
105	8.8	7.5		8.7	7.5		8.5	7.3		8.1	7.2		7.6	7		6.7			105
110	8.6	7.3		8.5	7.3		8.3	7.2		8	7.1		7.5	6.9		6.6	6.4		110
115	8.4	7.2	6.1	8.3	7.1	6.1	8.1	7		7.8	6.9		7.5	6.8		6.6	6.4		115
120	8.2	7	6.1	8.1	7	6	7.9	6.9	6	7.7	6.8		7.4	6.7		6.5	6.3		120
125	8	6.9	6	7.9	6.9	5.9	7.8	6.8	5.9	7.6	6.7	5.8	7.3	6.6	5.7	6.5	6.3		125
130	7.7	6.8	5.9	7.7	6.8	5.9	7.6	6.7	5.8	7.4	6.6	5.8	7.2	6.5	5.7	6.5	6.2	5.6	130
135	7.5	6.6	5.9	7.5	6.6	5.8	7.4	6.6	5.8	7.3	6.5	5.7	7	6.4	5.6	6.4	6.1	5.5	135
140	7.3	6.5	5.8	7.4	6.5	5.8	7.3	6.5	5.7	7.1	6.4	5.7	6.9	6.3	5.6	6.4	6.1	5.5	140
145	7.1	6.4	5.8	7.2	6.4	5.7	7.1	6.4	5.7	7	6.3	5.6	6.8	6.2	5.6	6.3	6	5.4	145
150	7	6.3	5.7	7	6.3	5.7	6.9	6.3	5.7	6.8	6.2	5.6	6.6	6.1	5.5	6.3	5.9	5.4	150
155	6.8	6.2	5.7	6.8	6.2	5.7	6.8	6.2	5.6	6.7	6.1	5.6	6.5	6	5.5	6.2	5.8	5.4	155
160	6.6	6.1	5.7	6.6	6.1	5.6	6.6	6.1	5.6	6.5	6	5.5	6.4	5.9	5.5	6	5.7	5.4	160
165	6.4	6	5.7	6.5	6	5.6	6.4	6	5.6	6.4	5.9	5.5	6.3	5.8	5.4	6	5.6	5.3	165
170	6.2	5.9	5.7	6.3	5.9	5.6	6.3	5.9	5.6	6.3	5.8	5.5	6.2	5.7	5.4	5.8	5.5	5.3	170
175	6.1	5.8	5.7	6.2	5.8	5.6	6.2	5.8	5.6	6.1	5.7	5.5	6	5.6	5.4	5.7	5.4	5.3	175
180	5.9	5.6	5.6	6	5.7	5.6	6	5.7	5.6	6	5.6	5.5	5.9	5.5	5.4	5.6	5.3	5.3	180
185	5.7	5.5	5.6	5.9	5.6	5.6	5.9	5.6	5.5	5.9	5.5	5.4	5.8	5.5	5.4	5.4	5.3	5.3	185
190	5.5	5.4	5.6	5.7	5.5	5.5	5.8	5.5	5.5	5.8	5.4	5.4	5.7	5.4	5.4	5.3	5.2	5.2	190
195	5.3	5.3	5.5	5.6	5.4	5.5	5.7	5.4	5.4	5.7	5.4	5.4	5.6	5.3	5.3	5.1	5.1	5.2	195
200	5.1	5.2	5.4	5.4	5.3	5.5	5.5	5.3	5.4	5.5	5.3	5.3	5.5	5.2	5.3	5	5	5.1	200
205	4.9	5.1	5.3	5.2	5.2	5.4	5.3	5.2	5.4	5.4	5.2	5.3	5.4	5.1	5.2	4.8	4.9	5	205
210	4.7	4.9		5.1	5.1	5.3	5.1	5.1	5.4	5.3	5.1	5.3	5.3	5.1	5.2	4.6	4.8	5	210
215	4.5	4.7		4.9	5	5.2	4.9	5	5.3	5.2	5.1	5.2	5.2	5	5.2	4.3	4.7	4.9	215
220	4.3	4.5		4.7	4.8	5	4.7	4.9	5.2	5	5	5.2	5.1	4.9	5.1	4.1	4.5	4.8	220
225	4.2	4.3		4.5	4.7		4.5	4.8	5	4.8	4.9	5.2	5	4.9	5.1	4	4.4	4.6	225
230	4	4.1		4.4	4.5		4.4	4.6	4.7	4.7	4.8	5.1	4.8	4.8	5.1	3.8	4.2	4.5	230
235	3.9			4.2	4.4		4.2	4.4	4.5	4.5	4.7	4.9	4.4	4.8	5	3.6	4	4.2	235
240				4.1	4.2		4	4.2		4.3	4.5	4.7	4	4.6	4.9	3.4	3.8	4	240
245				4	4.1		3.8	4		4.1	4.4	4.5	3.6	4.5	4.7	3.1	3.6	3.8	245
250				3.2			3.6	3.8		4	4.2	4.3	3.2	4.1	4.5	2.7	3.4	3.6	250
255							3.5	3.6		3.8	4		2.8	3.7	4	2.4	3.2	3.4	255
260							3.3			3.6	3.8		2.4	3.2	3.4	2	2.9	3.1	260
265										3.2	3.7		2	2.8	2.8	1.6	2.6	2.8	265
270										2.8	3.3		1.7	2.4			2.1	2.3	270
275													1.4	2			1.7		275
280														1.5					280

t_242_05400_00_000

Lifting capacities
Forces de levage

TVNZK

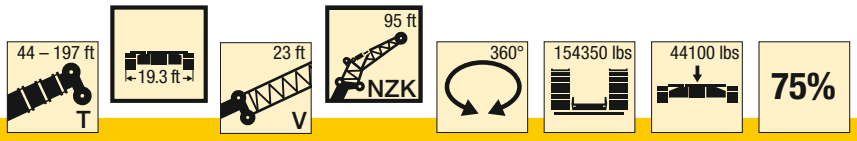

ft	44 ft + 23 ft			58 ft + 23 ft			72 ft + 23 ft			86 ft + 23 ft			100 ft + 23 ft			114 ft + 23 ft			ft
	95 ft			95 ft			95 ft			95 ft			95 ft			95 ft			
	0°	22.5°	45°	0°	22.5°	45°	0°	22.5°	45°	0°	22.5°	45°	0°	22.5°	45°	0°	22.5°	45°	
22	15.2																		22
24	15.2																		24
26	15.2			14.4															26
28	15.1			14.4			13.4												28
30	15.1			14.4			13.3												30
32	15.1			14.3			13.3			12.7									32
34	15			14.3			13.3			12.6			11.8						34
36	15			14.2			13.2			12.6			11.7						36
38	14.9			14.2			13.2			12.5			11.7			11.2			38
40	14.8			14.1			13.1			12.5			11.7			11.1			40
45	14.5			14			13			12.4			11.6			11.1			45
50	14			13.7			12.9			12.4			11.5			11			50
55	13.5			13.3			12.7			12.3			11.5			10.9			55
60	12.9	10.6		12.8			12.3			12.1			11.4			10.9			60
65	12.3	10.1		12.3	10		12	9.8		11.8			11.2			10.8			65
70	11.7	9.6		11.8	9.6		11.6	9.5		11.4			11			10.7			70
75	11.1	9.2		11.3	9.2		11.2	9.1		11.1	9.1		10.7			10.5			75
80	10.6	8.8		10.8	8.9		10.7	8.8		10.7	8.8		10.4	8.7		10.2	8.6		80
85	10	8.5	7.1	10.3	8.6		10.3	8.5		10.3	8.5		10.1	8.4		10	8.4		85
90	9.5	8.1	6.9	9.8	8.3		9.9	8.3		10	8.3		9.8	8.2		9.7	8.2		90
95	9.1	7.8	6.7	9.4	8	6.7	9.5	8	6.7	9.6	8		9.5	8		9.4	8		95
100	8.7	7.6	6.5	9	7.7	6.6	9.1	7.8	6.6	9.3	7.8	6.5	9.2	7.8	6.5	9.2	7.8		100
105	8.3	7.3	6.4	8.7	7.5	6.4	8.8	7.5	6.4	9	7.6	6.4	9	7.6	6.4	8.9	7.6	6.3	105
110	7.9	7.1	6.3	8.3	7.2	6.3	8.5	7.3	6.3	8.7	7.4	6.3	8.7	7.4	6.3	8.7	7.4	6.3	110
115	7.6	6.8	6.2	8	7	6.2	8.2	7.1	6.2	8.4	7.2	6.2	8.4	7.2	6.2	8.5	7.2	6.2	115
120	7.2	6.7	6.1	7.7	6.8	6.1	7.9	6.9	6.1	8.1	7	6.1	8.2	7.1	6.1	8.3	7.1	6.1	120
125	6.9	6.5	6	7.4	6.6	6	7.6	6.8	6.1	7.9	6.9	6.1	7.9	6.9	6	8	6.9	6	125
130	6.5	6.3	6	7	6.5	6	7.3	6.6	6	7.6	6.7	6	7.7	6.8	6	7.8	6.8	5.9	130
135	6.2	6.1	6	6.7	6.4	6	7	6.5	5.9	7.3	6.6	5.9	7.4	6.6	5.9	7.6	6.7	5.9	135
140	6	5.9	6	6.4	6.2	6	6.8	6.3	5.9	7.1	6.4	5.9	7.2	6.5	5.9	7.4	6.5	5.8	140
145	5.7	5.7	6	6.2	6	6	6.5	6.2	5.9	6.8	6.3	5.9	7	6.4	5.8	7.1	6.4	5.8	145
150	5.4	5.5		5.9	5.8	6	6.3	6.1	5.9	6.6	6.2	5.8	6.7	6.2	5.8	6.9	6.3	5.8	150
155				5.7	5.7	6	6.1	5.9	5.9	6.4	6.1	5.8	6.5	6.1	5.8	6.7	6.2	5.8	155
160				5.5	5.5		5.8	5.7	5.9	6.2	5.9	5.8	6.3	6	5.8	6.5	6.1	5.7	160
165				5.3	5.4		5.6	5.6		5.9	5.8	5.8	6.1	5.9	5.8	6.3	6	5.7	165
170							5.4	5.5		5.8	5.6	5.8	5.9	5.7	5.8	6.2	5.8	5.7	170
175							5.3	5.4		5.6	5.5	5.8	5.7	5.6	5.7	6	5.7	5.7	175
180							5.2			5.4	5.4		5.5	5.5	5.7	5.8	5.6	5.7	180
185										5.3	5.3		5.3	5.3	5.5	5.7	5.5	5.7	185
190										5.2	5.3		5.1	5.2		5.5	5.4	5.6	190
195										5.1			4.9	5		5.3	5.3	5.5	195
200													4.7	4.8		5.1	5.2	5.4	200
205													4.6	4.7		5	5		205
210													4.5			4.8	4.9		210
215																4.7	4.8		215
220																4.6	4.7		220

t_242_05410_00_000

Lifting capacities
Forces de levage

TVNZK

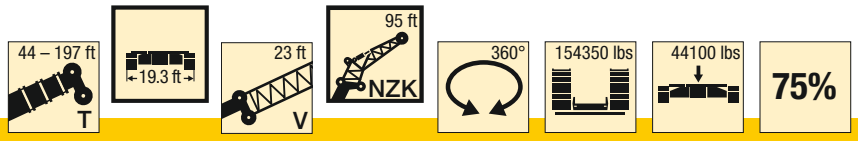

ft	128 ft + 23 ft			142 ft + 23 ft			156 ft + 23 ft			171 ft + 23 ft			185 ft + 23 ft			197 ft + 23 ft			ft
	95 ft			95 ft			95 ft			95 ft			95 ft			95 ft			
	0°	22.5°	45°	0°	22.5°	45°	0°	22.5°	45°	0°	22.5°	45°	0°	22.5°	45°	0°	22.5°	45°	
45	10.3			9.9															45
50	10.3			9.8															50
55	10.2			9.8			9.2												55
60	10.2			9.7			9.2			8.6			8						60
65	10.1			9.6			9.1			8.6			8			7.2			65
70	10			9.6			9.1			8.5			8			7.2			70
75	9.9			9.5			9			8.5			7.9			7.1			75
80	9.8			9.5			9			8.4			7.9			7.1			80
85	9.6	8.2		9.4			8.9			8.4			7.9			7			85
90	9.4	8		9.2			8.9	7.8		8.3			7.8			6.9			90
95	9.2	7.8		9	7.8		8.8	7.6		8.3			7.8			6.8			95
100	9	7.7		8.9	7.6		8.6	7.5		8.2	7.3		7.7			6.8			100
105	8.8	7.5		8.7	7.5		8.5	7.3		8.1	7.2		7.6	7		6.7			105
110	8.6	7.3		8.5	7.3		8.3	7.2		8	7.1		7.5	6.9		6.6	6.4		110
115	8.4	7.2	6.1	8.3	7.1	6.1	8.1	7		7.8	6.9		7.5	6.8		6.6	6.4		115
120	8.2	7	6.1	8.1	7	6	7.9	6.9	6	7.7	6.8		7.4	6.7		6.5	6.3		120
125	8	6.9	6	7.9	6.9	5.9	7.8	6.8	5.9	7.6	6.7	5.8	7.3	6.6	5.7	6.5	6.3		125
130	7.7	6.8	5.9	7.7	6.8	5.9	7.6	6.7	5.8	7.4	6.6	5.8	7.2	6.5	5.7	6.5	6.2	5.6	130
135	7.5	6.6	5.9	7.5	6.6	5.8	7.4	6.6	5.8	7.3	6.5	5.7	7	6.4	5.6	6.4	6.1	5.5	135
140	7.3	6.5	5.8	7.4	6.5	5.8	7.3	6.5	5.7	7.1	6.4	5.7	6.9	6.3	5.6	6.4	6.1	5.5	140
145	7.1	6.4	5.8	7.2	6.4	5.7	7.1	6.4	5.7	7	6.3	5.6	6.8	6.2	5.6	6.3	6	5.4	145
150	7	6.3	5.7	7	6.3	5.7	6.9	6.3	5.7	6.8	6.2	5.6	6.6	6.1	5.5	6.3	5.9	5.4	150
155	6.8	6.2	5.7	6.8	6.2	5.7	6.8	6.2	5.6	6.7	6.1	5.6	6.5	6	5.5	6.2	5.8	5.4	155
160	6.6	6.1	5.7	6.6	6.1	5.6	6.6	6.1	5.6	6.5	6	5.5	6.4	5.9	5.5	6	5.7	5.4	160
165	6.4	6	5.7	6.5	6	5.6	6.4	6	5.6	6.4	5.9	5.5	6.3	5.8	5.4	6	5.6	5.3	165
170	6.2	5.9	5.7	6.3	5.9	5.6	6.3	5.9	5.6	6.3	5.8	5.5	6.2	5.7	5.4	5.8	5.5	5.3	170
175	6.1	5.8	5.7	6.2	5.8	5.6	6.2	5.8	5.6	6.1	5.7	5.5	6	5.6	5.4	5.7	5.4	5.3	175
180	5.9	5.6	5.6	6	5.7	5.6	6	5.7	5.6	6	5.6	5.5	5.9	5.5	5.4	5.6	5.3	5.3	180
185	5.7	5.5	5.6	5.9	5.6	5.6	5.9	5.6	5.5	5.9	5.5	5.4	5.8	5.5	5.4	5.4	5.3	5.3	185
190	5.5	5.4	5.6	5.7	5.5	5.5	5.8	5.5	5.5	5.8	5.4	5.4	5.5	5.4	5.4	5	5.2	5.2	190
195	5.3	5.3	5.5	5.6	5.4	5.5	5.7	5.4	5.4	5.7	5.4	5.4	5.2	5.3	5.3	4.6	5.1	5.2	195
200	5.1	5.2	5.4	5.4	5.3	5.5	5.5	5.3	5.4	5.5	5.3	5.3	4.7	5.2	5.3	4.1	5	5.1	200
205	4.9	5.1	5.3	5.2	5.2	5.4	5.3	5.2	5.4	5.3	5.2	5.3	4.2	5.1	5.2	3.6	4.9	5	205
210	4.7	4.9		5.1	5.1	5.3	5.1	5.1	5.4	4.8	5.1	5.3	3.7	5	5.2	3.2	4.8	5	210
215	4.5	4.7		4.9	5	5.2	4.9	5	5.3	4.3	5.1	5.2	3.2	4.7	5.2	2.7	4.3	4.9	215
220	4.3	4.5		4.7	4.8	5	4.7	4.9	5.2	3.9	5	5.2	2.7	4.2	5	2.3	3.8	4.7	220
225	4.2	4.3		4.5	4.7		4.4	4.8	5	3.4	4.6	5.1	2.3	3.7	4.5	1.9	3.3	4.3	225
230	4	4.1		4.4	4.5		4	4.6	4.7	3	4.1	4.6	1.9	3.1	3.9		2.8	3.7	230
235	3.9			4.2	4.4		3.6	4.4	4.5	2.6	3.6	4.1	1.3	2.7	3.3		2.4	3.2	235
240				4.1	4.2		3.2	3.9		2.2	3.2	3.5		2.2	2.8		1.9	2.7	240
245				3.9	4.1		2.9	3.5		1.9	2.7	3		1.8	2.2		1.5	2.2	245
250				3.2			2.5	3		1.5	2.3	2.4			1.7			1.6	250
255							2.2	2.6			1.9								255
260							1.9				1.5								260

t_242_05410_00_000

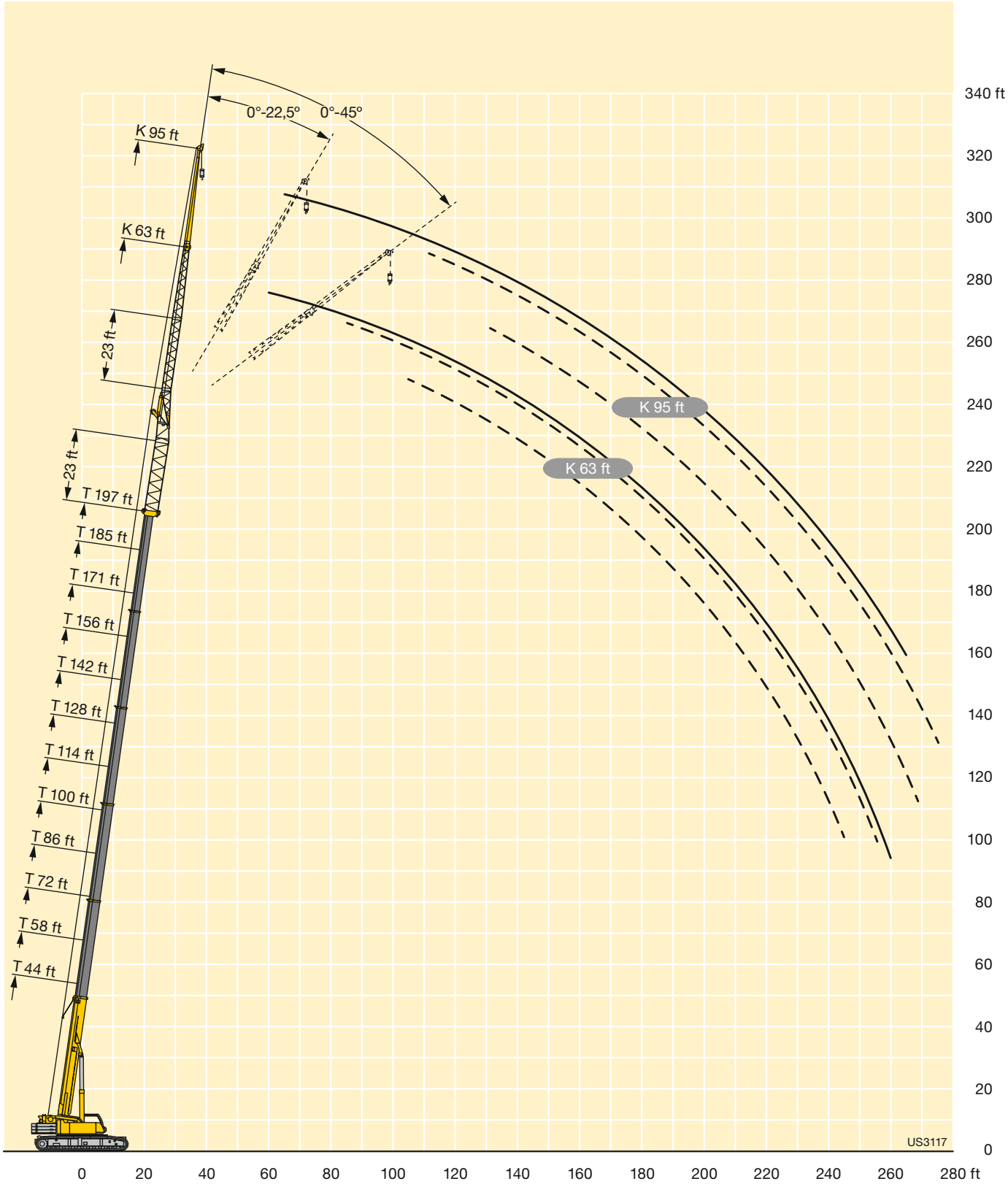
0°-22,5°
0°-45°
K 95 ft
K 63 ft
23 ft
23 ft
T 197 ft
T 185 ft
T 171 ft
T 156 ft
T 142 ft
T 128 ft
T 114 ft
T 100 ft
T 86 ft
T 72 ft
T 58 ft
T 44 ft
K 95 ft
K 63 ft
US3117
340 ft
320
300
280
260
240
220
200
180
160
140
120
100
80
60
40
20
0
0
20
40
60
80
100
120
140
160
180
200
220
240
260
280 ft

Lifting capacities
Forces de levage

TVNZK

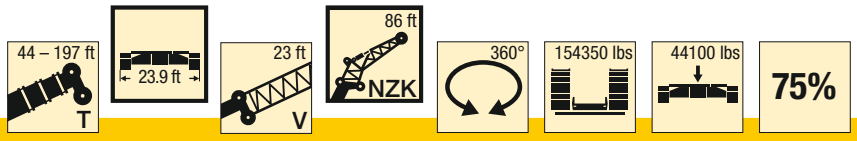

ft	44 ft + 23 ft			58 ft + 23 ft			72 ft + 23 ft			86 ft + 23 ft			100 ft + 23 ft			114 ft + 23 ft			ft
	86 ft			86 ft			86 ft			86 ft			86 ft			86 ft			
	0°	22.5°	45°	0°	22.5°	45°	0°	22.5°	45°	0°	22.5°	45°	0°	22.5°	45°	0°	22.5°	45°	
22	22.6			20.2															22
24	22.5			20.2															24
26	22.5			20.2															26
28	22.4			20.2			18.2												28
30	22.2			20.2			18.2												30
32	21.9			20.1			18.1			16.9									32
34	21.6			20			18.1			16.9									34
36	21.2			19.9			18			16.8			15.3						36
38	20.7			19.8			17.9			16.7			15.3			14.4			38
40	20.2			19.6			17.8			16.7			15.2			14.3			40
45	18.9			19			17.6			16.5			15.1			14.2			45
50	17.7			18.2			17.2			16.3			14.9			14.1			50
55	16.5	13.3		17.4			16.6			16.1			14.8			14			55
60	15.4	12.6		16.5	12.5		15.9			15.5			14.6			13.8			60
65	14.4	11.9		15.6	11.9		15.1	11.7		14.9	11.6		14.2			13.7			65
70	13.5	11.2		14.7	11.3		14.4	11.2		14.3	11.2		13.7			13.4			70
75	12.6	10.6		13.8	10.8		13.7	10.7		13.7	10.7		13.2	10.5		12.9			75
80	11.7	10.1	8.3	13	10.3	8.3	13	10.3		13.1	10.3		12.7	10.1		12.5	10.1		80
85	10.9	9.6	8	12.3	9.8	8.1	12.3	9.9	8	12.5	9.9		12.2	9.8		12	9.8		85
90	10.2	9.2	7.8	11.5	9.4	7.9	11.7	9.5	7.9	11.9	9.6		11.7	9.5		11.6	9.5		90
95	9.6	8.9	7.6	10.8	9.1	7.7	11	9.2	7.7	11.3	9.3	7.7	11.2	9.2	7.6	11.2	9.2		95
100	9	8.5	7.4	10.2	8.8	7.5	10.4	8.9	7.5	10.8	9	7.5	10.7	9	7.5	10.7	9	7.5	100
105	8.5	8.2	7.3	9.6	8.5	7.4	9.9	8.6	7.4	10.3	8.7	7.4	10.3	8.7	7.4	10.3	8.7	7.4	105
110	8	8	7.2	9	8.2	7.3	9.4	8.4	7.3	9.8	8.5	7.3	9.8	8.5	7.3	9.9	8.6	7.2	110
115	7.6	7.7	7.1	8.6	8	7.1	8.9	8.1	7.2	9.3	8.3	7.2	9.4	8.3	7.2	9.6	8.3	7.2	115
120	7.2	7.4	7	8.2	7.7	7.1	8.5	7.9	7.1	8.9	8.1	7.1	9	8.1	7.1	9.2	8.2	7.1	120
125	6.9	7	7	7.8	7.4	7	8.2	7.7	7	8.6	7.8	7	8.7	7.9	7	8.9	8	7	125
130	6.6	6.7	6.8	7.4	7.2	7	7.8	7.4	6.9	8.2	7.6	6.9	8.4	7.7	6.9	8.6	7.8	6.9	130
135	6.3	6.4	6.7	7.1	6.9	6.9	7.5	7.1	6.9	7.9	7.4	6.9	8.1	7.5	6.9	8.3	7.6	6.9	135
140	6	6.2		6.8	6.6	6.7	7.2	6.9	6.8	7.6	7.1	6.9	7.8	7.2	6.8	8	7.4	6.8	140
145	5.8			6.5	6.4		6.9	6.7	6.7	7.3	6.9	6.8	7.5	7.1	6.8	7.8	7.2	6.8	145
150				6.2	6.2		6.7	6.5	6.6	7.1	6.7	6.7	7.2	6.9	6.7	7.5	7	6.7	150
155				6	6.1		6.4	6.3	6.5	6.8	6.5	6.6	6.9	6.7	6.6	7.3	6.8	6.7	155
160							6.2	6.1		6.6	6.4	6.5	6.6	6.5	6.5	7	6.6	6.6	160
165							6	6		6.4	6.2	6.5	6.3	6.3	6.4	6.8	6.5	6.5	165
170							5.8	6		6.2	6.1		6.1	6.1	6.3	6.5	6.3	6.4	170
175										6	5.9		5.8	5.9	6.1	6.3	6.2	6.3	175
180										5.8	5.9		5.6	5.7		6.1	6	6.2	180
185										5.7			5.4	5.5		5.9	5.9	6	185
190													5.2	5.3		5.7	5.7	5.9	190
195													5	5.1		5.5	5.5		195
200													4.9			5.3	5.4		200
205																5.1	5.2		205
210																5	5.1		210
215																4.8			215

t_242_04400_00_000

Lifting capacities
Forces de levage

TVNZK

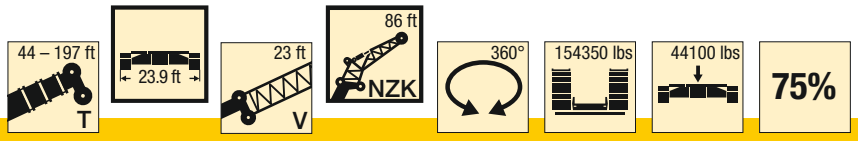

ft	128 ft + 23 ft			142 ft + 23 ft			156 ft + 23 ft			171 ft + 23 ft			185 ft + 23 ft			197 ft + 23 ft			ft
	86 ft			86 ft			86 ft			86 ft			86 ft			86 ft			
	0°	22.5°	45°	0°	22.5°	45°	0°	22.5°	45°	0°	22.5°	45°	0°	22.5°	45°	0°	22.5°	45°	
45	13.1			12.3															45
50	13			12.2															50
55	12.8			12.1			11.2												55
60	12.7			12			11.1			10.3			9.4						60
65	12.5			11.9			11			10.2			9.4			8.3			65
70	12.3			11.8			10.8			10.1			9.3			8.2			70
75	12.1			11.6			10.7			10			9.1			8.1			75
80	11.8	9.8		11.4			10.5			9.9			9.1			8			80
85	11.5	9.6		11.2	9.5		10.4			9.7			9			7.9			85
90	11.2	9.3		10.9	9.2		10.2			9.6			8.9			7.8			90
95	10.8	9.1		10.6	9		10.1	8.9		9.5	8.7		8.8			7.7			95
100	10.5	8.9		10.2	8.8		9.9	8.7		9.3	8.5		8.7	8.1		7.6			100
105	10.1	8.7	7.3	9.9	8.6	7.2	9.6	8.5		9.2	8.4		8.6	8		7.5	7.1		105
110	9.7	8.5	7.2	9.7	8.5	7.2	9.4	8.3		9	8.2		8.5	7.9		7.4	7.1		110
115	9.4	8.3	7.1	9.4	8.3	7.1	9.1	8.2	7	8.8	8.1	6.9	8.4	7.8		7.4	7.1		115
120	9.1	8.1	7	9.1	8.1	7	8.9	8	6.9	8.7	7.9	6.8	8.2	7.7	6.7	7.4	7.1		120
125	8.8	7.9	6.9	8.8	7.9	6.9	8.7	7.8	6.9	8.5	7.7	6.8	8.1	7.5	6.7	7.3	7	6.5	125
130	8.6	7.7	6.9	8.6	7.8	6.9	8.4	7.6	6.8	8.3	7.5	6.7	8	7.3	6.6	7.3	6.9	6.4	130
135	8.3	7.5	6.8	8.4	7.6	6.8	8.2	7.5	6.7	8.1	7.4	6.7	7.8	7.2	6.6	7.2	6.8	6.3	135
140	8.1	7.4	6.8	8.1	7.4	6.8	8	7.3	6.7	7.9	7.2	6.6	7.7	7.1	6.5	7.2	6.7	6.3	140
145	7.8	7.2	6.8	7.9	7.2	6.7	7.8	7.1	6.7	7.7	7.1	6.6	7.5	6.9	6.5	7.1	6.6	6.2	145
150	7.6	7	6.7	7.7	7.1	6.7	7.6	7	6.6	7.6	6.9	6.5	7.4	6.8	6.4	7	6.5	6.1	150
155	7.4	6.8	6.6	7.5	6.9	6.6	7.4	6.8	6.6	7.4	6.8	6.5	7.2	6.6	6.4	6.9	6.4	6.1	155
160	7.1	6.7	6.6	7.3	6.7	6.5	7.3	6.7	6.5	7.2	6.7	6.4	7.1	6.5	6.3	6.7	6.3	6	160
165	6.9	6.5	6.5	7.1	6.6	6.5	7.1	6.6	6.4	7.1	6.5	6.3	6.9	6.4	6.2	6.6	6.2	6	165
170	6.6	6.4	6.4	6.9	6.4	6.4	6.9	6.4	6.3	6.9	6.4	6.3	6.8	6.3	6.2	6.3	6.1	5.9	170
175	6.4	6.3	6.3	6.7	6.3	6.3	6.8	6.3	6.3	6.8	6.3	6.2	6.6	6.2	6.1	6.1	6	5.8	175
180	6.1	6.1	6.2	6.5	6.2	6.2	6.6	6.2	6.2	6.6	6.2	6.1	6.5	6.1	6	5.9	5.9	5.8	180
185	5.8	6	6.2	6.2	6.1	6.1	6.3	6.1	6.1	6.5	6.1	6.1	6.4	6	6	5.7	5.7	5.7	185
190	5.6	5.8	6	6	6	6.1	6.1	6	6	6.3	6	6	6.3	5.9	5.9	5.5	5.6	5.6	190
195	5.4	5.6	5.7	5.8	5.8	6	5.9	5.9	6	6.1	5.9	6	6.2	5.8	5.8	5.3	5.5	5.6	195
200	5.2	5.3	5.5	5.6	5.7	5.9	5.7	5.8	5.9	5.9	5.8	5.9	6	5.7	5.8	5.1	5.3	5.4	200
205	5	5.1		5.4	5.5	5.7	5.4	5.6	5.8	5.7	5.7	5.9	5.8	5.6	5.8	4.9	5.1	5.3	205
210	4.8	4.9		5.2	5.3	5.5	5.2	5.4	5.7	5.5	5.6	5.8	5.7	5.6	5.7	4.6	4.9	5.2	210
215	4.6	4.7		5	5.1		5	5.2	5.4	5.3	5.5	5.7	5.5	5.5	5.7	4.4	4.7	5	215
220	4.4	4.5		4.8	4.9		4.8	5	5.2	5.1	5.3	5.5	5.3	5.4	5.6	4.2	4.5	4.8	220
225	4.3			4.6	4.8		4.6	4.8	4.9	4.9	5.1	5.3	5	5.3	5.5	4	4.3	4.6	225
230				4.5	4.6		4.3	4.6	4.6	4.7	4.9	5.1	4.6	5.1	5.3	3.8	4.1	4.4	230
235				4.4	4.5		4.1	4.3		4.5	4.7	4.9	4.1	4.9	5.1	3.6	3.9	4.2	235
240				4.1			4	4.1		4.4	4.6	4.7	3.7	4.6	4.9	3.3	3.7	4	240
245							3.8	3.9		4.2	4.4	4.5	3.3	4.1	4.4	2.9	3.5	3.8	245
250							3.6	3.7		4	4.2		2.9	3.7	3.8	2.5	3.3	3.5	250
255							1.7			3.7	4		2.5	3.2	3.3	2.1	3	3.2	255
260										3.3	3.7		2.1	2.7		1.8	2.5	2.7	260
265										1.7			1.7	2.3		1.3	2.1	2.2	265
270													1.4	1.9			1.7		270
275														1.4					275

t_242_04400_00_000

Lifting capacities
Forces de levage

TVNZK

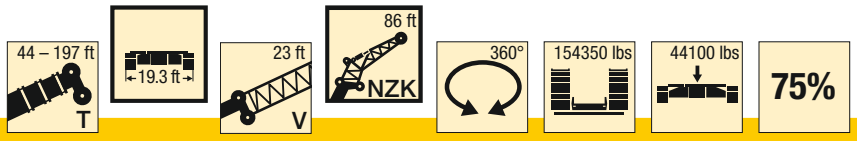

ft	44 ft + 23 ft			58 ft + 23 ft			72 ft + 23 ft			86 ft + 23 ft			100 ft + 23 ft			114 ft + 23 ft			ft
	86 ft			86 ft			86 ft			86 ft			86 ft			86 ft			
	0°	22.5°	45°	0°	22.5°	45°	0°	22.5°	45°	0°	22.5°	45°	0°	22.5°	45°	0°	22.5°	45°	
22	22.6			20.2															22
24	22.5			20.2															24
26	22.5			20.2															26
28	22.4			20.2			18.2												28
30	22.2			20.2			18.2												30
32	21.9			20.1			18.1			16.9									32
34	21.6			20			18.1			16.9									34
36	21.2			19.9			18			16.8			15.3						36
38	20.7			19.8			17.9			16.7			15.3			14.4			38
40	20.2			19.6			17.8			16.7			15.2			14.3			40
45	18.9			19			17.6			16.5			15.1			14.2			45
50	17.7			18.2			17.2			16.3			14.9			14.1			50
55	16.5	13.3		17.4			16.6			16.1			14.8			14			55
60	15.4	12.6		16.5	12.5		15.9			15.5			14.6			13.8			60
65	14.4	11.9		15.6	11.9		15.1	11.7		14.9	11.6		14.2			13.7			65
70	13.5	11.2		14.7	11.3		14.4	11.2		14.3	11.2		13.7			13.4			70
75	12.6	10.6		13.8	10.8		13.7	10.7		13.7	10.7		13.2	10.5		12.9			75
80	11.7	10.1	8.3	13	10.3	8.3	13	10.3		13.1	10.3		12.7	10.1		12.5	10.1		80
85	10.9	9.6	8	12.3	9.8	8.1	12.3	9.9	8	12.5	9.9		12.2	9.8		12	9.8		85
90	10.2	9.2	7.8	11.5	9.4	7.9	11.7	9.5	7.9	11.9	9.6		11.7	9.5		11.6	9.5		90
95	9.6	8.9	7.6	10.8	9.1	7.7	11	9.2	7.7	11.3	9.3	7.7	11.2	9.2	7.6	11.2	9.2		95
100	9	8.5	7.4	10.2	8.8	7.5	10.4	8.9	7.5	10.8	9	7.5	10.7	9	7.5	10.7	9	7.5	100
105	8.5	8.2	7.3	9.6	8.5	7.4	9.9	8.6	7.4	10.3	8.7	7.4	10.3	8.7	7.4	10.3	8.7	7.4	105
110	8	8	7.2	9	8.2	7.3	9.4	8.4	7.3	9.8	8.5	7.3	9.8	8.5	7.3	9.9	8.6	7.2	110
115	7.6	7.7	7.1	8.6	8	7.1	8.9	8.1	7.2	9.3	8.3	7.2	9.4	8.3	7.2	9.6	8.3	7.2	115
120	7.2	7.4	7	8.2	7.7	7.1	8.5	7.9	7.1	8.9	8.1	7.1	9	8.1	7.1	9.2	8.2	7.1	120
125	6.9	7	7	7.8	7.4	7	8.2	7.7	7	8.6	7.8	7	8.7	7.9	7	8.9	8	7	125
130	6.6	6.7	6.8	7.4	7.2	7	7.8	7.4	6.9	8.2	7.6	6.9	8.4	7.7	6.9	8.6	7.8	6.9	130
135	6.3	6.4	6.7	7.1	6.9	6.9	7.5	7.1	6.9	7.9	7.4	6.9	8.1	7.5	6.9	8.3	7.6	6.9	135
140	6	6.2		6.8	6.6	6.7	7.2	6.9	6.8	7.6	7.1	6.9	7.8	7.2	6.8	8	7.4	6.8	140
145	5.8			6.5	6.4		6.9	6.7	6.7	7.3	6.9	6.8	7.5	7.1	6.8	7.8	7.2	6.8	145
150				6.2	6.2		6.7	6.5	6.6	7.1	6.7	6.7	7.2	6.9	6.7	7.5	7	6.7	150
155				6	6.1		6.4	6.3	6.5	6.8	6.5	6.6	6.9	6.7	6.6	7.3	6.8	6.7	155
160							6.2	6.1		6.6	6.4	6.5	6.6	6.5	6.5	7	6.6	6.6	160
165							6	6		6.4	6.2	6.5	6.3	6.3	6.4	6.8	6.5	6.5	165
170							5.8	6		6.2	6.1		6.1	6.1	6.3	6.5	6.3	6.4	170
175										6	5.9		5.8	5.9	6.1	6.3	6.2	6.3	175
180										5.8	5.9		5.6	5.7		6.1	6	6.2	180
185										5.7			5.4	5.5		5.9	5.9	6	185
190													5.2	5.3		5.7	5.7	5.9	190
195													5	5.1		5.5	5.5		195
200													4.9			5.3	5.4		200
205																5.1	5.2		205
210																5	5.1		210
215																4.8			215

t_242_04410_00_000

Lifting capacities
Forces de levage

TVNZK

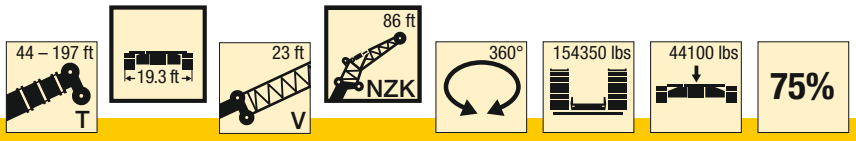

ft	128 ft + 23 ft			142 ft + 23 ft			156 ft + 23 ft			171 ft + 23 ft			185 ft + 23 ft			197 ft + 23 ft			ft
	86 ft			86 ft			86 ft			86 ft			86 ft			86 ft			
	0°	22.5°	45°	0°	22.5°	45°	0°	22.5°	45°	0°	22.5°	45°	0°	22.5°	45°	0°	22.5°	45°	
45	13.1			12.3															45
50	13			12.2															50
55	12.8			12.1			11.2												55
60	12.7			12			11.1			10.3			9.4						60
65	12.5			11.9			11			10.2			9.4			8.3			65
70	12.3			11.8			10.8			10.1			9.3			8.2			70
75	12.1			11.6			10.7			10			9.1			8.1			75
80	11.8	9.8		11.4			10.5			9.9			9.1			8			80
85	11.5	9.6		11.2	9.5		10.4			9.7			9			7.9			85
90	11.2	9.3		10.9	9.2		10.2			9.6			8.9			7.8			90
95	10.8	9.1		10.6	9		10.1	8.9		9.5	8.7		8.8			7.7			95
100	10.5	8.9		10.2	8.8		9.9	8.7		9.3	8.5		8.7	8.1		7.6			100
105	10.1	8.7	7.3	9.9	8.6	7.2	9.6	8.5		9.2	8.4		8.6	8		7.5	7.1		105
110	9.7	8.5	7.2	9.7	8.5	7.2	9.4	8.3		9	8.2		8.5	7.9		7.4	7.1		110
115	9.4	8.3	7.1	9.4	8.3	7.1	9.1	8.2	7	8.8	8.1	6.9	8.4	7.8		7.4	7.1		115
120	9.1	8.1	7	9.1	8.1	7	8.9	8	6.9	8.7	7.9	6.8	8.2	7.7	6.7	7.4	7.1		120
125	8.8	7.9	6.9	8.8	7.9	6.9	8.7	7.8	6.9	8.5	7.7	6.8	8.1	7.5	6.7	7.3	7	6.5	125
130	8.6	7.7	6.9	8.6	7.8	6.9	8.4	7.6	6.8	8.3	7.5	6.7	8	7.3	6.6	7.3	6.9	6.4	130
135	8.3	7.5	6.8	8.4	7.6	6.8	8.2	7.5	6.7	8.1	7.4	6.7	7.8	7.2	6.6	7.2	6.8	6.3	135
140	8.1	7.4	6.8	8.1	7.4	6.8	8	7.3	6.7	7.9	7.2	6.6	7.7	7.1	6.5	7.2	6.7	6.3	140
145	7.8	7.2	6.8	7.9	7.2	6.7	7.8	7.1	6.7	7.7	7.1	6.6	7.5	6.9	6.5	7.1	6.6	6.2	145
150	7.6	7	6.7	7.7	7.1	6.7	7.6	7	6.6	7.6	6.9	6.5	7.4	6.8	6.4	7	6.5	6.1	150
155	7.4	6.8	6.6	7.5	6.9	6.6	7.4	6.8	6.6	7.4	6.8	6.5	7.2	6.6	6.4	6.9	6.4	6.1	155
160	7.1	6.7	6.6	7.3	6.7	6.5	7.3	6.7	6.5	7.2	6.7	6.4	7.1	6.5	6.3	6.7	6.3	6	160
165	6.9	6.5	6.5	7.1	6.6	6.5	7.1	6.6	6.4	7.1	6.5	6.3	6.9	6.4	6.2	6.6	6.2	6	165
170	6.6	6.4	6.4	6.9	6.4	6.4	6.9	6.4	6.3	6.9	6.4	6.3	6.8	6.3	6.2	6.3	6.1	5.9	170
175	6.4	6.3	6.3	6.7	6.3	6.3	6.8	6.3	6.3	6.8	6.3	6.2	6.6	6.2	6.1	6.1	6	5.8	175
180	6.1	6.1	6.2	6.5	6.2	6.2	6.6	6.2	6.2	6.6	6.2	6.1	6.5	6.1	6	5.9	5.9	5.8	180
185	5.8	6	6.2	6.2	6.1	6.1	6.3	6.1	6.1	6.5	6.1	6.1	6	6	6	5.4	5.7	5.7	185
190	5.6	5.8	6	6	6	6.1	6.1	6	6	6.3	6	6	5.5	5.9	5.9	4.9	5.6	5.6	190
195	5.4	5.6	5.7	5.8	5.8	6	5.9	5.9	6	6	5.9	6	5	5.8	5.8	4.4	5.5	5.6	195
200	5.2	5.3	5.5	5.6	5.7	5.9	5.7	5.8	5.9	5.6	5.8	5.9	4.4	5.7	5.8	3.9	5.3	5.4	200
205	5	5.1		5.4	5.5	5.7	5.4	5.6	5.8	5	5.7	5.9	3.9	5.3	5.8	3.4	4.9	5.3	205
210	4.8	4.9		5.2	5.3	5.5	5.2	5.4	5.7	4.5	5.6	5.8	3.3	4.8	5.5	2.9	4.4	5.1	210
215	4.6	4.7		5	5.1		4.9	5.2	5.4	4	5.2	5.6	2.9	4.2	5	2.5	3.9	4.8	215
220	4.4	4.5		4.8	4.9		4.5	5	5.2	3.6	4.6	5.2	2.4	3.7	4.4	2	3.4	4.2	220
225	4.3			4.6	4.8		4.1	4.8	4.9	3.1	4.1	4.5	2	3.2	3.8	1.5	2.9	3.6	225
230				4.5	4.6		3.7	4.4	4.5	2.7	3.6	4	1.5	2.7	3.2		2.4	3.1	230
235				4.3	4.5		3.3	3.9		2.3	3.1	3.4		2.2	2.6		2	2.5	235
240				4			2.9	3.4		2	2.7	2.8		1.7	2.1		1.4	2	240
245							2.6	3		1.6	2.3	2.3			1.5			1.4	245
250							2.3	2.5			1.8								250
255							1.7				1.4								255

t_242_04410_00_000

Lifting capacities
Forces de levage

TVNZK

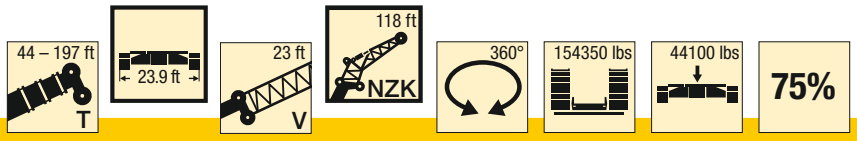

ft	44 ft + 23 ft			58 ft + 23 ft			72 ft + 23 ft			86 ft + 23 ft			100 ft + 23 ft			114 ft + 23 ft			ft
	118 ft			118 ft			118 ft			118 ft			118 ft			118 ft			
	0°	22.5°	45°	0°	22.5°	45°	0°	22.5°	45°	0°	22.5°	45°	0°	22.5°	45°	0°	22.5°	45°	
24	10.1																		24
26	10.5																		26
28	10.8			9.9															28
30	11			10.1															30
32	11			10.3			9.3												32
34	10.9			10.3			9.4			8.9									34
36	10.9			10.3			9.5			9									36
38	10.8			10.2			9.5			9.1									38
40	10.8			10.2			9.5			9									40
45	10.5			10.1			9.4			9			8.4			8.1			45
50	10.2			9.9			9.3			8.9			8.4			8			50
55	9.8			9.6			9.1			8.8			8.3			8			55
60	9.4			9.3			8.9			8.7			8.3			7.9			60
65	9.1			9			8.7			8.5			8.2			7.9			65
70	8.7	7.2		8.6			8.4			8.3			8			7.8			70
75	8.3	6.9		8.3			8.1			8			7.8			7.6			75
80	7.9	6.6		8	6.6		7.9			7.8			7.6			7.4			80
85	7.5	6.3		7.7	6.3		7.6	6.2		7.5	6.2		7.4			7.2			85
90	7.2	6		7.3	6.1		7.3	6		7.3	6		7.1	5.9		7.1	5.8		90
95	6.9	5.8		7	5.8		7	5.8		7.1	5.8		6.9	5.7		6.9	5.7		95
100	6.6	5.5		6.7	5.6		6.8	5.6		6.8	5.6		6.7	5.5		6.7	5.5		100
105	6.2	5.3	4.4	6.4	5.4		6.5	5.4		6.6	5.4		6.5	5.4		6.5	5.3		105
110	6	5.1	4.3	6.2	5.2	4.3	6.3	5.2	4.3	6.4	5.3		6.3	5.2		6.3	5.2		110
115	5.7	4.9	4.2	5.9	5	4.2	6	5.1	4.2	6.2	5.1		6.1	5.1		6.1	5.1		115
120	5.4	4.8	4.1	5.7	4.9	4.1	5.8	4.9	4.1	5.9	4.9	4.1	6	4.9		6	4.9		120
125	5.2	4.6	4	5.5	4.7	4	5.6	4.7	4	5.7	4.8	4	5.8	4.8	4	5.8	4.8	3.9	125
130	5	4.4	3.9	5.3	4.6	3.9	5.4	4.6	3.9	5.5	4.6	3.9	5.6	4.7	3.9	5.6	4.7	3.9	130
135	4.8	4.3	3.8	5	4.4	3.9	5.2	4.5	3.8	5.3	4.5	3.8	5.4	4.5	3.8	5.5	4.5	3.8	135
140	4.6	4.2	3.8	4.9	4.3	3.8	5	4.3	3.8	5.2	4.4	3.8	5.2	4.4	3.8	5.3	4.4	3.7	140
145	4.4	4	3.7	4.7	4.2	3.7	4.8	4.2	3.7	5	4.3	3.7	5.1	4.3	3.7	5.1	4.3	3.7	145
150	4.2	3.9	3.7	4.5	4	3.7	4.7	4.1	3.7	4.9	4.2	3.7	4.9	4.2	3.7	5	4.2	3.6	150
155	4	3.8	3.7	4.3	3.9	3.7	4.5	4	3.6	4.7	4.1	3.6	4.8	4.1	3.6	4.9	4.2	3.6	155
160	3.8	3.7	3.7	4.2	3.9	3.6	4.4	3.9	3.6	4.6	4	3.6	4.6	4	3.6	4.7	4.1	3.6	160
165	3.7	3.7	3.7	4	3.8	3.6	4.2	3.9	3.6	4.4	3.9	3.6	4.5	3.9	3.5	4.6	4	3.5	165
170	3.5	3.7		3.9	3.7	3.6	4.1	3.8	3.6	4.3	3.8	3.6	4.4	3.9	3.5	4.5	3.9	3.5	170
175	3.4	3.7		3.7	3.7		4	3.7	3.6	4.1	3.8	3.6	4.3	3.8	3.5	4.4	3.8	3.5	175
180				3.6	3.6		3.8	3.6	3.6	4.1	3.7	3.6	4.1	3.7	3.5	4.3	3.8	3.5	180
185				3.4	3.6		3.7	3.6	3.6	3.9	3.6	3.6	4	3.7	3.5	4.1	3.7	3.5	185
190				3.3			3.6	3.6		3.8	3.6	3.6	3.9	3.6	3.5	4	3.6	3.5	190
195							3.5	3.6		3.7	3.6	3.6	3.8	3.6	3.5	3.9	3.6	3.5	195
200							3.4	3.5		3.6	3.5		3.8	3.5	3.5	3.8	3.5	3.5	200
205							3.3			3.5	3.5		3.7	3.5	3.5	3.8	3.5	3.5	205
210										3.4	3.5		3.5	3.5		3.7	3.5	3.5	210
215										3.3	3.5		3.5	3.4		3.6	3.4	3.5	215
220													3.4	3.4		3.5	3.4		220
225													3.2	3.3		3.4	3.4		225
230													3.1			3.3	3.3		230
235																3.2	3.3		235
240																3.2	3.3		240
245																3.2			245

t_242_06400_00_000

Lifting capacities
Forces de levage

TVNZK

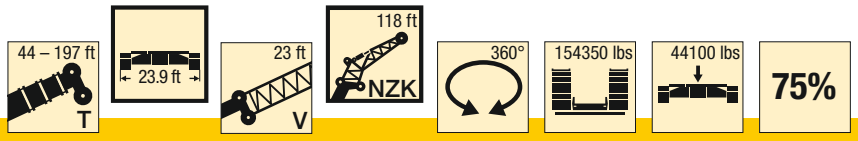

ft	128 ft + 23 ft			142 ft + 23 ft			156 ft + 23 ft			171 ft + 23 ft			185 ft + 23 ft			197 ft + 23 ft			ft
	118 ft			118 ft			118 ft			118 ft			118 ft			118 ft			
	0°	22.5°	45°	0°	22.5°	45°	0°	22.5°	45°	0°	22.5°	45°	0°	22.5°	45°	0°	22.5°	45°	
55	7.5			7.2															55
60	7.5			7.2			6.7												60
65	7.4			7.1			6.7			6.2			5.7						65
70	7.4			7.1			6.6			6.1			5.6			4.5			70
75	7.3			7			6.6			6.1			5.6			4.5			75
80	7.2			7			6.5			6.1			5.6			4.5			80
85	7			6.8			6.5			6			5.6			4.5			85
90	6.8			6.7			6.4			6			5.5			4.4			90
95	6.7			6.6			6.3			6			5.5			4.3			95
100	6.5	5.4		6.4			6.2			5.9			5.5			4.3			100
105	6.4	5.3		6.3	5.2		6.1			5.8			5.4			4.2			105
110	6.2	5.1		6.1	5.1		6	5		5.7	4.9		5.4			4.1			110
115	6	5		6	5		5.8	4.9		5.6	4.8		5.3			4.1			115
120	5.9	4.9		5.8	4.8		5.7	4.8		5.5	4.7		5.2	4.6		4			120
125	5.7	4.7		5.7	4.7		5.6	4.6		5.4	4.6		5.2	4.5		4	4.2		125
130	5.6	4.6	3.8	5.5	4.6	3.8	5.4	4.5		5.3	4.5		5.1	4.4		3.9	4.1		130
135	5.4	4.5	3.8	5.4	4.5	3.8	5.3	4.5		5.2	4.4		5	4.3		3.9	4.1		135
140	5.3	4.4	3.7	5.3	4.4	3.7	5.2	4.4	3.6	5.1	4.3		4.9	4.2		3.8	4		140
145	5.2	4.3	3.7	5.2	4.3	3.6	5.1	4.3	3.6	5	4.2	3.5	4.8	4.1		3.8	4		145
150	5	4.2	3.6	5	4.2	3.6	5	4.2	3.6	4.9	4.1	3.5	4.7	4	3.4	3.7	3.9		150
155	4.9	4.2	3.6	4.9	4.2	3.6	4.9	4.1	3.5	4.8	4.1	3.5	4.7	4	3.4	3.7	3.8		155
160	4.8	4.1	3.5	4.8	4.1	3.5	4.7	4	3.5	4.7	4	3.4	4.6	3.9	3.4	3.7	3.8	3.3	160
165	4.6	4	3.5	4.7	4	3.5	4.6	4	3.4	4.6	3.9	3.4	4.5	3.8	3.3	3.6	3.7	3.3	165
170	4.5	3.9	3.5	4.6	3.9	3.4	4.5	3.9	3.4	4.5	3.9	3.4	4.4	3.8	3.3	3.6	3.7	3.2	170
175	4.4	3.8	3.4	4.5	3.9	3.4	4.4	3.8	3.4	4.4	3.8	3.3	4.3	3.7	3.3	3.5	3.6	3.2	175
180	4.3	3.8	3.4	4.3	3.8	3.4	4.3	3.8	3.4	4.3	3.7	3.3	4.2	3.7	3.3	3.5	3.6	3.2	180
185	4.2	3.7	3.4	4.2	3.7	3.4	4.2	3.7	3.3	4.2	3.7	3.3	4.1	3.6	3.2	3.5	3.5	3.2	185
190	4.1	3.6	3.4	4.2	3.7	3.4	4.1	3.6	3.3	4.1	3.6	3.3	4.1	3.6	3.2	3.5	3.5	3.2	190
195	4	3.6	3.4	4.1	3.6	3.4	4.1	3.6	3.3	4.1	3.6	3.3	4	3.5	3.2	3.5	3.4	3.1	195
200	3.9	3.5	3.4	4	3.6	3.4	4	3.5	3.3	4	3.5	3.3	3.9	3.5	3.2	3.5	3.4	3.1	200
205	3.8	3.5	3.4	3.9	3.5	3.4	3.9	3.5	3.3	3.9	3.5	3.3	3.8	3.4	3.2	3.5	3.3	3.1	205
210	3.7	3.5	3.4	3.8	3.5	3.4	3.8	3.4	3.3	3.8	3.4	3.3	3.8	3.4	3.2	3.5	3.3	3.1	210
215	3.7	3.4	3.4	3.7	3.4	3.4	3.8	3.4	3.3	3.7	3.4	3.3	3.7	3.3	3.2	3.4	3.2	3.1	215
220	3.6	3.4	3.4	3.6	3.4	3.4	3.7	3.4	3.3	3.7	3.3	3.3	3.6	3.3	3.2	3.3	3.2	3.1	220
225	3.5	3.4	3.4	3.5	3.4	3.4	3.6	3.3	3.3	3.6	3.3	3.3	3.5	3.3	3.2	3.1	3.2	3.1	225
230	3.3	3.3	3.4	3.5	3.3	3.4	3.5	3.3	3.3	3.5	3.3	3.3	3.5	3.2	3.2	2.9	3.2	3.1	230
235	3.2	3.3		3.4	3.3	3.4	3.4	3.3	3.3	3.4	3.2	3.3	3.4	3.2	3.2	2.7	3.1	3	235
240	3.1	3.2		3.3	3.3	3.4	3.3	3.2	3.3	3.4	3.2	3.3	3.3	3.2	3.2	2.6	3	3	240
245	2.9	3.1		3.2	3.2		3.2	3.2	3.3	3.3	3.2	3.3	3.2	3.1	3.2	2.4	2.8	3	245
250	2.8	2.9		3.1	3.2		3	3.2	3.3	3.2	3.2	3.3	3	3.1	3.2	2.2	2.7	3	250
255	2.7			3	3.1		2.9	3.1	3.3	3.1	3.1	3.3	2.7	3.1	3.2	2	2.5	2.8	255
260	2.4			2.9	3		2.7	3		3	3.1	3.3	2.3	3	3.2	1.8	2.4	2.7	260
265				2.8	2.9		2.5	2.8		2.8	3	3.2	1.9	3	3.2	1.4	2.2	2.5	265
270				2.7			2.4	2.6		2.7	2.9	3.1	1.6	2.7	3.2		2	2.3	270
275							2.2			2.5	2.8			2.3	2.8			2.1	275
280							2			2.2	2.6			1.9	2.2			1.8	280
285										1.9	2.5			1.6					285
290										1.5									290

t_242_06400_00_000

Lifting capacities
Forces de levage

TVNZK

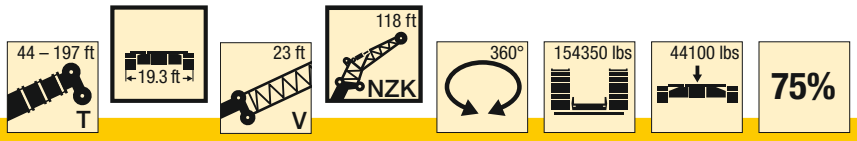

ft	44 ft + 23 ft			58 ft + 23 ft			72 ft + 23 ft			86 ft + 23 ft			100 ft + 23 ft			114 ft + 23 ft			ft
	118 ft			118 ft			118 ft			118 ft			118 ft			118 ft			
	0°	22.5°	45°	0°	22.5°	45°	0°	22.5°	45°	0°	22.5°	45°	0°	22.5°	45°	0°	22.5°	45°	
24	10.1																		24
26	10.5																		26
28	10.8			9.9															28
30	11			10.1															30
32	11			10.3			9.3												32
34	10.9			10.3			9.4			8.9									34
36	10.9			10.3			9.5			9									36
38	10.8			10.2			9.5			9.1									38
40	10.8			10.2			9.5			9									40
45	10.5			10.1			9.4			9			8.4			8.1			45
50	10.2			9.9			9.3			8.9			8.4			8			50
55	9.8			9.6			9.1			8.8			8.3			8			55
60	9.4			9.3			8.9			8.7			8.3			7.9			60
65	9.1			9			8.7			8.5			8.2			7.9			65
70	8.7	7.2		8.6			8.4			8.3			8			7.8			70
75	8.3	6.9		8.3			8.1			8			7.8			7.6			75
80	7.9	6.6		8	6.6		7.9			7.8			7.6			7.4			80
85	7.5	6.3		7.7	6.3		7.6	6.2		7.5	6.2		7.4			7.2			85
90	7.2	6		7.3	6.1		7.3	6		7.3	6		7.1	5.9		7.1	5.8		90
95	6.9	5.8		7	5.8		7	5.8		7.1	5.8		6.9	5.7		6.9	5.7		95
100	6.6	5.5		6.7	5.6		6.8	5.6		6.8	5.6		6.7	5.5		6.7	5.5		100
105	6.2	5.3	4.4	6.4	5.4		6.5	5.4		6.6	5.4		6.5	5.4		6.5	5.3		105
110	6	5.1	4.3	6.2	5.2	4.3	6.3	5.2	4.3	6.4	5.3		6.3	5.2		6.3	5.2		110
115	5.7	4.9	4.2	5.9	5	4.2	6	5.1	4.2	6.2	5.1		6.1	5.1		6.1	5.1		115
120	5.4	4.8	4.1	5.7	4.9	4.1	5.8	4.9	4.1	5.9	4.9	4.1	6	4.9		6	4.9		120
125	5.2	4.6	4	5.5	4.7	4	5.6	4.7	4	5.7	4.8	4	5.8	4.8	4	5.8	4.8	3.9	125
130	5	4.4	3.9	5.3	4.6	3.9	5.4	4.6	3.9	5.5	4.6	3.9	5.6	4.7	3.9	5.6	4.7	3.9	130
135	4.8	4.3	3.8	5	4.4	3.9	5.2	4.5	3.8	5.3	4.5	3.8	5.4	4.5	3.8	5.5	4.5	3.8	135
140	4.6	4.2	3.8	4.9	4.3	3.8	5	4.3	3.8	5.2	4.4	3.8	5.2	4.4	3.8	5.3	4.4	3.7	140
145	4.4	4	3.7	4.7	4.2	3.7	4.8	4.2	3.7	5	4.3	3.7	5.1	4.3	3.7	5.1	4.3	3.7	145
150	4.2	3.9	3.7	4.5	4	3.7	4.7	4.1	3.7	4.9	4.2	3.7	4.9	4.2	3.7	5	4.2	3.6	150
155	4	3.8	3.7	4.3	3.9	3.7	4.5	4	3.6	4.7	4.1	3.6	4.8	4.1	3.6	4.9	4.2	3.6	155
160	3.8	3.7	3.7	4.2	3.9	3.6	4.4	3.9	3.6	4.6	4	3.6	4.6	4	3.6	4.7	4.1	3.6	160
165	3.7	3.7	3.7	4	3.8	3.6	4.2	3.9	3.6	4.4	3.9	3.6	4.5	3.9	3.5	4.6	4	3.5	165
170	3.5	3.7		3.9	3.7	3.6	4.1	3.8	3.6	4.3	3.8	3.6	4.4	3.9	3.5	4.5	3.9	3.5	170
175	3.4	3.7		3.7	3.7		4	3.7	3.6	4.1	3.8	3.6	4.3	3.8	3.5	4.4	3.8	3.5	175
180				3.6	3.6		3.8	3.6	3.6	4.1	3.7	3.6	4.1	3.7	3.5	4.3	3.8	3.5	180
185				3.4	3.6		3.7	3.6	3.6	3.9	3.6	3.6	4	3.7	3.5	4.1	3.7	3.5	185
190				3.3			3.6	3.6		3.8	3.6	3.6	3.9	3.6	3.5	4	3.6	3.5	190
195							3.5	3.6		3.7	3.6	3.6	3.8	3.6	3.5	3.9	3.6	3.5	195
200							3.4	3.5		3.6	3.5		3.8	3.5	3.5	3.8	3.5	3.5	200
205							3.3			3.5	3.5		3.7	3.5	3.5	3.8	3.5	3.5	205
210										3.4	3.5		3.5	3.5		3.7	3.5	3.5	210
215										3.3	3.5		3.5	3.4		3.6	3.4	3.5	215
220													3.4	3.4		3.5	3.4		220
225													3.2	3.3		3.4	3.4		225
230													3.1			3.3	3.3		230
235																3.2	3.3		235
240																3.2	3.3		240
245																3.2			245

t_242_06410_00_000

Lifting capacities
Forces de levage

TVNZK

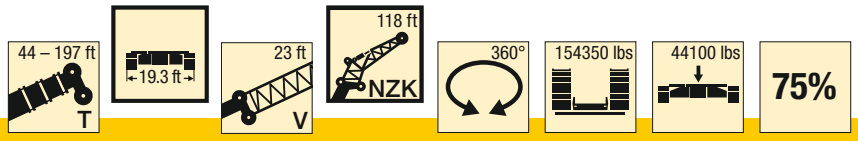

ft	128 ft + 23 ft			142 ft + 23 ft			156 ft + 23 ft			171 ft + 23 ft			185 ft + 23 ft			197 ft + 23 ft			ft
	118 ft			118 ft			118 ft			118 ft			118 ft			118 ft			
	0°	22.5°	45°	0°	22.5°	45°	0°	22.5°	45°	0°	22.5°	45°	0°	22.5°	45°	0°	22.5°	45°	
55	7.5			7.2															55
60	7.5			7.2			6.7												60
65	7.4			7.1			6.7			6.2			5.7						65
70	7.4			7.1			6.6			6.1			5.6			4.5			70
75	7.3			7			6.6			6.1			5.6			4.5			75
80	7.2			7			6.5			6.1			5.6			4.5			80
85	7			6.8			6.5			6			5.6			4.5			85
90	6.8			6.7			6.4			6			5.5			4.4			90
95	6.7			6.6			6.3			6			5.5			4.3			95
100	6.5	5.4		6.4			6.2			5.9			5.5			4.3			100
105	6.4	5.3		6.3	5.2		6.1			5.8			5.4			4.2			105
110	6.2	5.1		6.1	5.1		6	5		5.7	4.9		5.4			4.1			110
115	6	5		6	5		5.8	4.9		5.6	4.8		5.3			4.1			115
120	5.9	4.9		5.8	4.8		5.7	4.8		5.5	4.7		5.2	4.6		4			120
125	5.7	4.7		5.7	4.7		5.6	4.6		5.4	4.6		5.2	4.5		4	4.2		125
130	5.6	4.6	3.8	5.5	4.6	3.8	5.4	4.5		5.3	4.5		5.1	4.4		3.9	4.1		130
135	5.4	4.5	3.8	5.4	4.5	3.8	5.3	4.5		5.2	4.4		5	4.3		3.9	4.1		135
140	5.3	4.4	3.7	5.3	4.4	3.7	5.2	4.4	3.6	5.1	4.3		4.9	4.2		3.8	4		140
145	5.2	4.3	3.7	5.2	4.3	3.6	5.1	4.3	3.6	5	4.2	3.5	4.8	4.1		3.8	4		145
150	5	4.2	3.6	5	4.2	3.6	5	4.2	3.6	4.9	4.1	3.5	4.7	4	3.4	3.7	3.9		150
155	4.9	4.2	3.6	4.9	4.2	3.6	4.9	4.1	3.5	4.8	4.1	3.5	4.7	4	3.4	3.7	3.8		155
160	4.8	4.1	3.5	4.8	4.1	3.5	4.7	4	3.5	4.7	4	3.4	4.6	3.9	3.4	3.7	3.8	3.3	160
165	4.6	4	3.5	4.7	4	3.5	4.6	4	3.4	4.6	3.9	3.4	4.5	3.8	3.3	3.6	3.7	3.3	165
170	4.5	3.9	3.5	4.6	3.9	3.4	4.5	3.9	3.4	4.5	3.9	3.4	4.4	3.8	3.3	3.6	3.7	3.2	170
175	4.4	3.8	3.4	4.5	3.9	3.4	4.4	3.8	3.4	4.4	3.8	3.3	4.3	3.7	3.3	3.5	3.6	3.2	175
180	4.3	3.8	3.4	4.3	3.8	3.4	4.3	3.8	3.4	4.3	3.7	3.3	4.2	3.7	3.3	3.5	3.6	3.2	180
185	4.2	3.7	3.4	4.2	3.7	3.4	4.2	3.7	3.3	4.2	3.7	3.3	4.1	3.6	3.2	3.5	3.5	3.2	185
190	4.1	3.6	3.4	4.2	3.7	3.4	4.1	3.6	3.3	4.1	3.6	3.3	4.1	3.6	3.2	3.5	3.5	3.2	190
195	4	3.6	3.4	4.1	3.6	3.4	4.1	3.6	3.3	4.1	3.6	3.3	4	3.5	3.2	3.5	3.4	3.1	195
200	3.9	3.5	3.4	4	3.6	3.4	4	3.5	3.3	4	3.5	3.3	3.9	3.5	3.2	3.5	3.4	3.1	200
205	3.8	3.5	3.4	3.9	3.5	3.4	3.9	3.5	3.3	3.9	3.5	3.3	3.7	3.4	3.2	3.2	3.3	3.1	205
210	3.7	3.5	3.4	3.8	3.5	3.4	3.8	3.4	3.3	3.8	3.4	3.3	3.5	3.4	3.2	2.9	3.3	3.1	210
215	3.7	3.4	3.4	3.7	3.4	3.4	3.8	3.4	3.3	3.7	3.4	3.3	3	3.3	3.2	2.5	3.2	3.1	215
220	3.6	3.4	3.4	3.6	3.4	3.4	3.7	3.4	3.3	3.7	3.3	3.3	2.6	3.3	3.2	2	3.2	3.1	220
225	3.5	3.4	3.4	3.5	3.4	3.4	3.6	3.3	3.3	3.4	3.3	3.3	2.2	3.3	3.2	1.5	3.2	3.1	225
230	3.3	3.3	3.4	3.5	3.3	3.4	3.5	3.3	3.3	3	3.3	3.3	1.7	3.2	3.2		3.1	3.1	230
235	3.2	3.3		3.4	3.3	3.4	3.4	3.3	3.3	2.6	3.2	3.3		3	3.2		2.6	3	235
240	3.1	3.2		3.3	3.3	3.4	3.2	3.2	3.3	2.2	3.2	3.3		2.6	3.2		2.2	3	240
245	2.9	3.1		3.2	3.2		2.8	3.2	3.3	1.9	3	3.3		2.2	3.1		1.8	2.8	245
250	2.8	2.9		3.1	3.2		2.5	3.2	3.3	1.5	2.7	3.3		1.8	2.7			2.4	250
255	2.7			3	3.1		2.1	3	3.2		2.3	2.8			2.2			1.9	255
260	2.4			2.8	3		1.8	2.6			1.9	2.3			1.7				260
265				2.6	2.9		1.5	2.2			1.5	1.9							265
270				2.3				1.9											270

t_242_06410_00_000

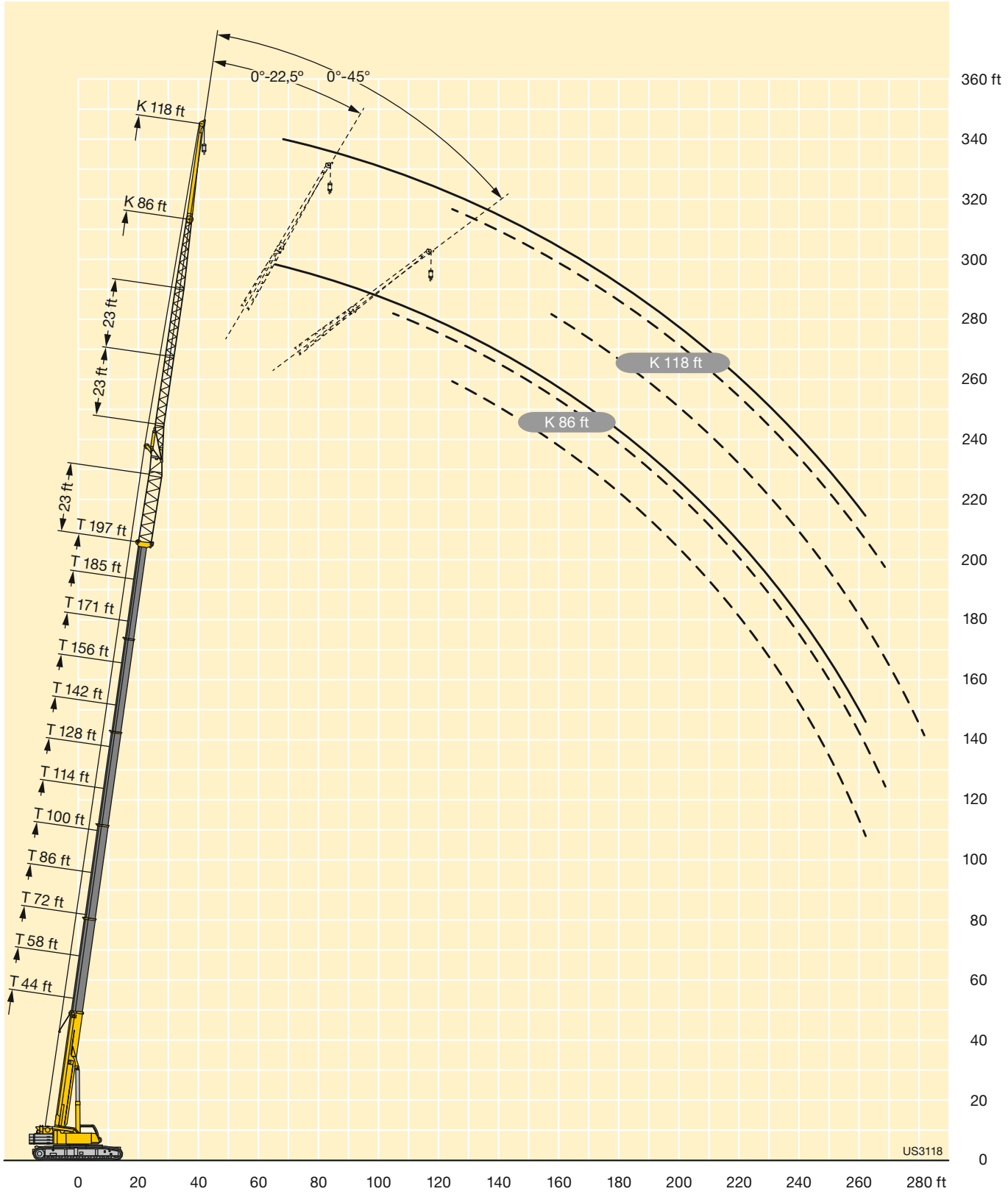
0°-22,5°
0°-45°
K 118 ft
K 86 ft
23 ft
23 ft
23 ft
T 197 ft
T 185 ft
T 171 ft
T 156 ft
T 142 ft
T 128 ft
T 114 ft
T 100 ft
T 86 ft
T 72 ft
T 58 ft
T 44 ft
K 118 ft
K 86 ft
360 ft
340
320
300
280
260
240
220
200
180
160
140
120
100
80
60
40
20
0
0
20
40
60
80
100
120
140
160
180
200
220
240
260
280 ft
US3118

Lifting capacities
Forces de levage

THK

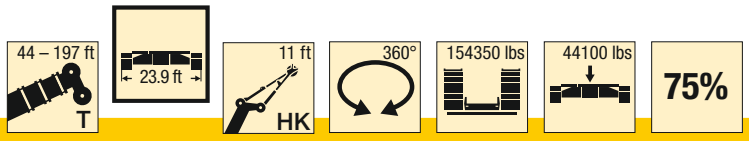

ft	44 ft	58 ft	72 ft	86 ft	100 ft	114 ft	128 ft	142 ft	156 ft	171 ft	185 ft	197 ft	ft
	11 ft												
10	90.9												10
11	90.9	90.9											11
12	90.9	90.9											12
13	90.9	90.9											13
14	90.9	90.9	90.9										14
15	90.9	90.9	90.9										15
16	90.9	90.9	90.9	90.9									16
17	90.9	90.9	90.9	90.9									17
18	90.9	90.9	90.9	90.9									18
19	90.9	90.9	90.9	90.9	90.9								19
20	90.9	90.9	90.9	90.9	90.9								20
22	90.9	90.9	90.9	90.9	90.9								22
24	90.9	90.9	90.9	90.9	90.9	90.9							24
26	90.9	90.9	90.9	90.9	90.9	90.9							26
28	90.9	90.9	90.9	90.9	90.9	90.9	90.9						28
30	90.9	90.9	90.9	90.9	90.9	90.9	90.9						30
32	89.3	90.9	90.9	90.9	90.9	90.9	90.7	72.7					32
34	84.1	90.9	90.9	90.9	90.9	90.9	90.1	78.4					34
36	79	90.9	90.9	90.9	90.9	90.9	88.9	76.2					36
38	74.6	90.9	90.9	90.9	90.9	90.9	86.9	74.1					38
40	72.4	90	90.9	90.9	90.9	89.7	84	72.1	61.3	48.4			40
45	67.3	80.7	90.9	90.9	90.9	83.8	77	67.2	58.1	49.9	41.9		45
50		73.3	88.4	90.7	89.5	79.5	71.2	62.7	54.9	47.1	40.2	35.1	50
55		69.4	80.2	82	80.5	75.7	65.8	58.7	51.7	44.4	38.4	33.6	55
60		64.6	73.3	72.9	71.3	71.7	60.8	54.8	48.8	42	36.6	32	60
65			66	65.2	65.8	65.1	56.1	51.2	46.1	39.9	34.8	30.6	65
70			59.5	59.3	60.3	58.7	52.2	47.8	43.6	38.1	33.2	29.1	70
75			46.8	55.6	54.7	53.1	48.4	44.8	41.3	36.4	31.6	27.7	75
80				50.8	49.8	48.3	45.1	42.3	39.2	34.7	30.1	26.4	80
85				46.5	45.6	44	41.9	40.3	37.1	33	28.7	25.2	85
90				29.2	41.9	40.3	38.7	38	35.2	31.4	27.4	24	90
95					38.5	37	35.9	35.8	33.3	30	26.2	22.9	95
100					35.2	34	34.5	33.5	31.5	28.6	25	21.8	100
105						31.3	32.4	30.8	29.8	27.4	24	20.8	105
110						30.1	30	28.4	28.1	26.2	22.9	19.9	110
115						27.5	27.7	26.8	26.6	25.1	22	19	115
120							25.8	25.1	24.9	23.9	21.1	18.1	120
125							23.9	23.6	23	22.6	20.2	17.4	125
130							21	22.7	21.3	20.9	19.4	16.6	130
135								21.2	20.2	19.8	18.6	15.9	135
140								19.8	19.1	18.3	17.8	15.3	140
145								15	17.8	16.9	16.7	14.6	145
150									17.1	15.7	15.4	14	150
155									15.7	15	14.3	13.4	155
160									9.1	14.2	13.2	12.9	160
165										13.2	12.1	12.1	165
170										11.4	11.1	11.1	170
175											10.2	10.2	175
180											9.5	9.4	180
185											7.5	8.8	185
190												8.1	190
195												7.3	195
200												3.3	200

t_242_07100_00_000

Lifting capacities
Forces de levage

THK

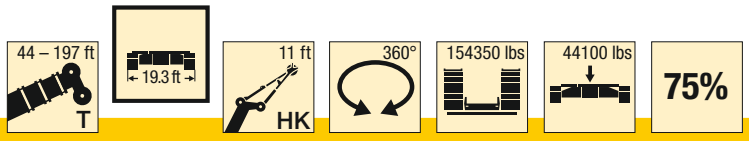

ft	44 ft	58 ft	72 ft	86 ft	100 ft	114 ft	128 ft	142 ft	156 ft	171 ft	185 ft	197 ft	ft
	11 ft												
10	90.9												10
11	90.9	90.9											11
12	90.9	90.9											12
13	90.9	90.9											13
14	90.9	90.9	90.9										14
15	90.9	90.9	90.9										15
16	90.9	90.9	90.9	90.9									16
17	90.9	90.9	90.9	90.9									17
18	90.9	90.9	90.9	90.9									18
19	90.9	90.9	90.9	90.9	90.9								19
20	90.9	90.9	90.9	90.9	90.9								20
22	90.9	90.9	90.9	90.9	90.9								22
24	90.9	90.9	90.9	90.9	90.9	90.9							24
26	90.9	90.9	90.9	90.9	90.9	90.9							26
28	90.9	90.9	90.9	90.9	90.9	90.9	90.9						28
30	90.9	90.9	90.9	90.9	90.9	90.9	90.9						30
32	89.3	90.9	90.9	90.9	90.9	90.9	90.7	72.7					32
34	84.1	90.9	90.9	90.9	90.9	90.9	90.1	78.4					34
36	79	90.9	90.9	90.9	90.9	90.9	88.9	76.2					36
38	74.6	90.9	90.9	90.9	90.9	90.9	86.9	74.1					38
40	72.4	90	90.9	90.9	90.9	89.7	84	72.1	61.3	48.4			40
45	67.3	80.7	90.7	89.8	88.7	83.8	77	67.2	58.1	49.9	41.9		45
50		73.3	78.8	78.1	76.8	77.3	71.1	62.7	54.9	47.1	40.2	35.1	50
55		68.4	68.7	68.4	69.4	68	64.9	58.7	51.7	44.4	38.4	33.6	55
60		60.2	60.6	62.1	61.3	59.9	58.3	54.8	48.8	42	36.6	32	60
65			55.4	55.3	54.6	53.1	51.7	50.5	46.1	39.9	34.8	30.6	65
70			49.8	49.7	48.9	47.6	47.1	46.3	43.6	38.1	33.2	29.1	70
75			45	45	44.1	42.8	43	42.4	41.2	36.4	31.6	27.7	75
80				40.8	40	38.9	39.7	38.3	38.2	34.7	30.1	26.4	80
85				37.3	36.5	36.7	36.1	35.6	34.6	33	28.7	25.2	85
90				29.2	33.4	34.3	33	32.5	32	31.4	27.4	24	90
95					30.8	31.6	30.2	30.1	29.6	29.1	26.2	22.9	95
100					29.8	29.1	28.1	28.3	27.7	26.7	25	21.8	100
105						26.9	25.9	26.1	25.6	24.9	23.9	20.8	105
110						25	24.7	24.1	23.6	22.9	22.6	19.9	110
115						23.2	23.6	22.3	22.3	21.4	20.8	19	115
120							21.9	21	20.6	20	19	18.1	120
125							20.4	19.4	19	18.4	17.4	17.2	125
130							19	18.5	17.5	17	16	15.9	130
135								17.5	16.3	15.6	14.6	14.6	135
140								16.2	15.3	14.4	13.4	13.4	140
145								15	14.1	13.2	12.2	12.2	145
150									13.1	12.2	11.1	11.1	150
155									12.1	11.2	10.1	10.1	155
160									9.1	10.3	9.2	9.2	160
165										9.4	8.4	8.3	165
170										8.7	7.5	7.5	170
175											6.8	6.8	175
180											6.1	6	180
185											5.4	5.4	185
190												4.7	190
195												4.1	195
200												3.3	200

t_242_07110_00_000

Lifting capacities
Forces de levage

THK

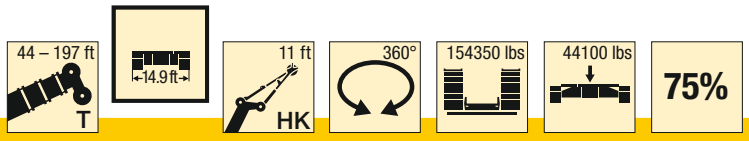

ft	44 ft	58 ft	72 ft	86 ft	100 ft	114 ft	128 ft	142 ft	156 ft	171 ft	185 ft	197 ft	ft
	11 ft												
36		90.3		84.3									36
38	74.6	87.7	84.9	83.1	73.5								38
40	72.4	81.5	80.9	78.6	70.7								40
45	67.3	69.9	70.1	69.5	66.9	59.7							45
50		60.1	61.9	61.8	61.1	58.8	54.2	47.2					50
55		53.2	54.2	54.1	53.3	52.9	51.1	46.6	41.9				55
60		46.8	47.8	47.7	47	47.5	46.7	43.5	41.2	38.1	34.8		60
65			42.6	42.5	42.2	42.6	41.7	40.4	38.6	35.9	32.6	30.5	65
70			38.2	38.1	39.1	38.3	37.6	37.4	35.7	33.8	30.5	28.7	70
75			34.4	34.3	35.3	34.5	34.5	34.1	32.8	31.5	28.6	27	75
80				31.7	32	31.2	31.7	30.8	30.2	28.9	26.8	25.3	80
85				29.5	29.2	28.9	28.8	28.5	27.7	26.3	24.7	23.7	85
90				27	26.7	27	26.3	26.2	25.4	24	22.5	21.8	90
95					24.5	24.8	24.1	24	23.2	22	20.5	19.9	95
100					22.6	22.8	22.3	22	21.1	20.1	18.6	18.1	100
105						21	20.6	20.2	19.2	18.3	17	16.5	105
110						19.4	18.9	18.4	17.5	16.6	15.4	15	110
115						17.9	17.4	16.9	16	15.1	14	13.6	115
120							16	15.5	14.5	13.7	12.7	12.4	120
125							14.7	14.2	13.2	12.4	11.4	11.2	125
130							13.5	13	12	11.2	10.2	10.1	130
135								11.9	11	10.1	9.1	9.1	135
140								10.9	10	9.1	8.1	8.1	140
145								10	9	8.1	7.1	7.1	145
150									8.2	7.3	6.3	6.2	150
155									7.4	6.5	5.5	5.4	155
160									6.7	5.7	4.7	4.7	160
165										5	4	3.9	165
170										4.4	3.3	3.3	170
175											2.7	2.6	175

t_242_07110_00_000

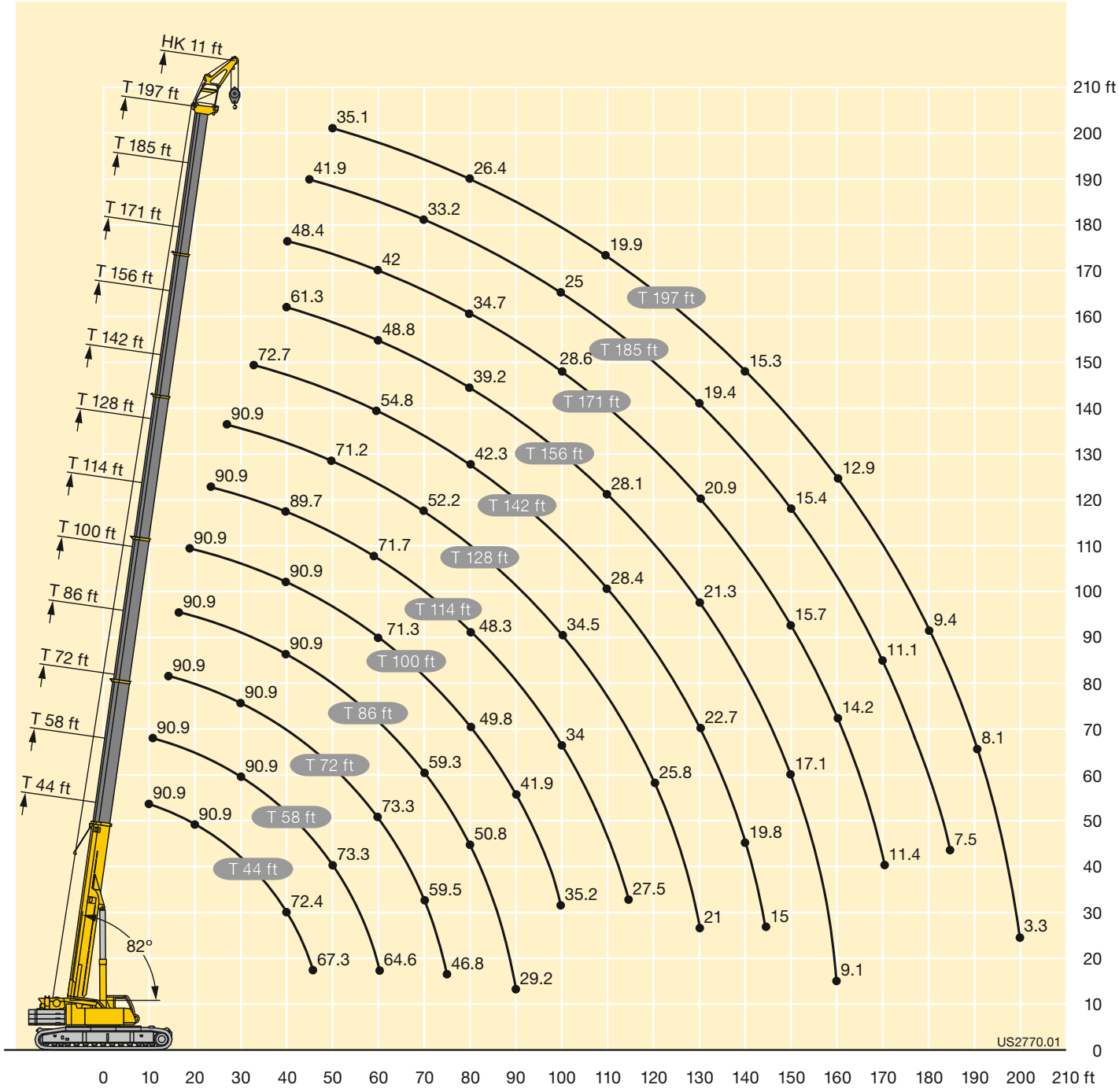
HK 11 ft
T 197 ft
T 185 ft
T 171 ft
T 156 ft
T 142 ft
T 128 ft
T 114 ft
T 100 ft
T 86 ft
T 72 ft
T 58 ft
T 44 ft
82°
T 197 ft
35.1 26.4 19.9 15.3 12.9 9.4 8.1 3.3
T 185 ft
41.9 33.2 25 19.4 15.4 11.1 7.5
T 171 ft
48.4 42 34.7 28.6 20.9 14.2 11.4
T 156 ft
61.3 48.8 39.2 28.1 21.3 17.1 9.1
T 142 ft
72.7 54.8 42.3 28.4 22.7 19.8
T 128 ft
90.9 71.2 52.2 34.5 25.8 21
T 114 ft
90.9 89.7 71.7 48.3 34 27.5
T 100 ft
90.9 90.9 71.3 49.8 41.9 35.2
T 86 ft
90.9 90.9 59.3 50.8 29.2
T 72 ft
90.9 90.9 73.3 59.5 46.8
T 58 ft
90.9 90.9 73.3 64.6
T 44 ft
90.9 90.9 72.4 67.3
US2770.01
0 10 20 30 40 50 60 70 80 90 100 110 120 130 140 150 160 170 180 190 200 210 ft
0 10 20 30 40 50 60 70 80 90 100 110 120 130 140 150 160 170 180 190 200 210 ft

Crawler travel gear

Frame	Low torsion box construction, consisting of crawler center section, two traverse beams and two crawler carriers. The crawler carriers can be removed from the telescoping traverse beams. Hydraulic track width adjustment.
Tracks	Maintenance free crawler chassis with 3'3" wide flat crawler pads.
Travel drive	Per crawler carrier, a hydraulic travel drive consisting of an axial piston motor, planetary gear with spring-loaded hydraulically-releasable travel brake. The crawler chains can be controlled synchronously as well as independently and counter-rotating. Travel speed: 0 – 1.55 mph.
Central ballast	44100 lbs, placement blocks at 22050 lbs each, mounting on crawler center section.

Crane superstructure

Frame	Liebherr-manufactured, torsionally rigid steel construction made from high-tensile fine-grain steel. Triple-roller slewing rim.
Crane engine	Diesel, 4 cylinder, watercooled, make Liebherr, output 230 kW (312 h.p.), max. torque 1062 lbs-ft. Exhaust emissions acc. to (EU) 2016/1628, EPA/CARB or ECE-R.96. Fuel tank capacity: 185 gallons.
Crane drive	Diesel-hydraulic, with 5 axial piston variable displacement pumps, with servo-control and capacity control, 1 double gear pump. Compact hydraulic drive flanged to the Diesel engine. Drive assembly completely enclosed for noise abatment.
Control	Electronic control by the LICCON computer system (PLC control), two self-centering control levers (joy-sticks). Infinitely variable crane motions through displacement control of the hydraulic pump. Additional working speed control by variation of the Diesel engine.
Hoist gear	Axial piston variable displacement motor, Liebherr hoist drum with integrated planetary gear and spring-loaded static brake. Actuation by closed regulated oil circuit.
Luffing gear	1 differential ram with nonreturn valve.
Slewing gear	Axial piston fixed displacement motor, planetary gear, spring-loaded static brake.
Crane cab	Large screen area, compound glass, comfort furnishing, cabin tiltable 20° to rear.
Safety devices	LICCON2 safe load indicator, test system, hoist limit switches, safety valves against rupture of pipes and hoses.
Telescopic boom	1 base section and 5 telescopic sections. All telescopic sections extendable individually by means of the rapid-cycle telescoping system Telematik. Boom length 44 ft to 197 ft.
Counterweight	110250 lbs
Electrical system	Modern data bus technique, 24 Volt DC, 2 batteries of 170 Ah each.

Additional equipment

Swing-away jib K/NZK	40 ft – 72 ft long, mountable to the telescopic boom at 0°, 22.5° or 45°. Hydraulic ram for operating the swing-away jib from 0° – 45° (option).
Telescopic boom extension V	23 ft long lattice section, thus 23 ft higher pining point for swing-away jib.
Intermediate sections	2 intermediate sections of 23 ft each for the extension of the biparted swing-away jib to 95 ft or 118 ft.
Erection jib HK	11 ft
2nd hoist gear	For two-hook operation or for operation with swing-away jib if the hoist rope shall remain reeved.
Additional counterweight	2 additional counterweight slabs of 22050 lbs each for a total counterweight of 154350 lbs.

Other items of equipment available on request.

Technical description
Description téchniques

Train de chenilles

Châssis	Construction en caisson indéformable haute résistance, constitué de la partie centrale du train de roulement, deux traverses et de deux longerons. Les longerons peuvent être démontés des traverses télescopiques. Réglage hydraulique de la voie.
Train de roulement	Train de chenilles sans entretien avec tuiles plates de 3'3" de large.
Transmission	Une transmission hydraulique par longeron, comprenant un moteur à cylindrée variable et pistons axiaux, un réducteur planétaire avec frein à ressort et à déblocage hydraulique. Les chaînes sont synchrones, indépendantes et une commande inversée est possible. Vitesse de translation: 0 – 1.55 mph.
Contrepoids central	44100 lbs, blocs de suspension de 22050 lbs chacun, fixation sur la partie centrale du train de roulement.

Partie tournante

Châssis	Fabrication Liebherr, construction soudée indéformable, en acier à grain fin haute résistance. Couronne d'orientation à triple rangée de rouleaux.
Moteur	Diesel, 4 cylindres, marque Liebherr, refroidissement par eau, puissance 230 kW (312 ch), couple maxi. 1062 lbs-ft. Emissions des gaz d'échappement conformes au directive (EU) 2016/1628, EPA/CARB ou ECE-R.96. Capacité du réservoir carburant: 185 gallons.
Entraînement de la grue	Diesel hydraulique avec 5 pompes à débit variable à pistons axiaux, servocommande et régulation de la puissance, 1 double pompe à engrenages. Entraînement hydraulique compact, accouplé directement au moteur Diesel, mécanisme d'entraînement total fermé pour une bonne insonorisation.
Commande	Commande électronique par l'ordinateur LICCON (commande SPS). 2 leviers à 4 directions avec rappel automatique au point mort. Commande des mouvements progressive en continu par variation de l'inclinaison des pompes et augmentation du régime moteur.
Mécanisme de levage	Moteur hydraulique à cylindrée variable, treuil de marque Liebherr avec réducteur planétaire à frein d'arrêt à lamelles intégrées, en circuit hydraulique fermé.
Mécanisme de relevage	1 vérin hydraulique différentiel avec clapets anti-retour de sécurité.
Dispositif de rotation	Moteur à cylindrée constante à pistons axiaux, engrenage planétaire, frein d'arrêt commandé par ressort.
Cabine du grutier	Large champ de vision, vitrage de sécurité, équipement pour un confort idéal, cabine inclinable de 20° vers l'arrière.
Dispositif de sécurité	Contrôleur de charge LICCON2, système test, fin de course crochet haut, clapets de sécurité en cas de ruptures de flexibles.
Flèche télescopique	Un élément de base et de 5 télescopes. Chaque partie peut être télescopée individuellement à l'aide du système de télescopage séquentiel rapide Telematik. Longueur de flèche: 44 ft – 197 ft.
Contrepoids	110250 lbs
Installation électrique	Technique moderne de transmission de données. Courant continu 24 Volts, 2 batteries de 170 Ah chacune.

Equipement supplémentaire

Fléchette pliante K/NZK	Longueur: 40 ft – 72 ft, montable sous un angle de 0°, 22,5° ou 45°. Vérin hydraulique pour le relevage de la fléchette pliante de 0° à 45° (en option).
Rallonge flèche télescopique V	Elément en treillis de 23 ft, de cette manière point d'articulation plus haute de 23 ft pour la flèche pliante.
Eléments intermédiaires	2 éléments intermédiaires de 23 ft de long pour l'allongement de la fléchette pliante double jusqu'à 95 ft resp. 118 ft.
Fléchette de montage HK	11 ft
2ème mécanisme de levage	Pour l'utilisation du deuxième crochet, ou bien pour une utilisation avec fléchette pliante lorsque le câble de levage principal rest mouflé.
Contrepoids supplémentaire	22050 lbs pour un contrepoids total de 154350 lbs.

Autres équipements supplémentaires sur demande.

Description of symbols
Explication des symboles

General symbols
Symboles généraux

ft	Radius Portée		Width crawler chassis Largeur du train de chenilles
	Boom length Longueur de la flèche	G	Total weight Poids total
	Boom position Position de la flèche		Hookblock / Capacity Moufle à crochet / Capacité de charge
P	Ground pressure Pression au sol		Hoist gear Treuil de levage
	Slewing gear / Working area Mécanisme d'orientation / Plage de travail		Crane superstructure Partie tournante de la grue
mph	Driving speed Vitesse de translation	75%	Standard Norme
	Counterweight Contrepoids		Gradability Aptitude à gravir les pentes
	Central ballast Contrepoids central	F	Driving force Puissance propulsive

Crane specific symbols
Symboles spécifiques à la grue

T	Telescopic boom Flèche télescopique	V	Telescopic boom extension Rallonge fleche telescopique
NZK	Hydraulic swing away jib Fléchette pliante hydraulique	HK	Erection jib Flechette de montage

Remarks referring to load charts

1. The lifting capacities do not exceed 75 % of the tipping load according to ASME B 30.5.
   The crane's structural steelwork is in accordance with EN 13000 and ASME B 30.5.
2. For the calculation of the load charts at least a wind speed of 30 ft/s (9 m/s, 20.1 mph) and regarding the load a sail area of 1 m² per ton load and a wind resistance coefficient of 1.2 on the load have been taken into account. For lifting of loads with large sail areas and/or high wind resistance coefficients the maximum wind speed as stated in the load charts has to be reduced.
3. The lifting capacities stated are valid for lifting operation only (corresponding with crane classification according to ISO 4301-1, crane group A1).
4. Lifting capacities are given in kips.
5. The weight of the hook blocks and hooks is part of the load and therefore it must be deducted from the lifting capacities.
6. Working radii are measured from the slewing centreline.
7. The stated lengths of the telescopic boom are maximum values and may deviate slightly.
8. The lifting capacities given for the telescopic boom only apply if the folding jib is taken off.
9. Subject to modification of lifting capacities.
10. Lifting capacities above 295400 lbs/332900 lbs only with additional pulley block/special equipment.
11. Lateral inclination ± 0.3°.
12. The data of this brochure serves only for general information. All information is provided without warranty. Instructions for the correct commissioning of the crane please take from the operation manual and the load chart book.

Remarques relatives aux tableaux des charges

1. La capacité de charge ne doit pas dépasser 75 % de la charge de basculement conformément à ASME B 30.5.
   La structure métallique de la grue est conforme à EN 13000 et ASME B 30.5.
2. Une vitesse de vent de 30 ft/s (9 m/s, 20.1 mph) minimum, une surface de prise au vent de 1 m² par tonne ainsi qu'un coefficient de résistance au vent de la charge 1,2 sont pris en compte pour le calcul des tableaux de charge. Lorsque des charges ayant une surface de prise au vent et/ou un coefficient de résistance au vent plus élevé(e)(s) sont levées, la vitesse de vent maximale indiquée dans les tableaux de charge doit être réduite.
3. Forces de levage pour application de grue de montage (correspond à la classification de grues selon ISO 4301-1, groupe de grues A1).
4. Les charges sont indiquées en kips.
5. Le poids du crochet de levage resp. de la moufle à crochet est une partie de la charge et doit donc être déduit de la capacité de charge.
6. Les portées sont prises à partir de l'axe de rotation de la partie tournante.
7. Les charges données en configuration flèche télescopiques s'entendent sans la fléchette pliante repliée contre le télescope en position route ou en position de travail en tête de télescope.
8. Les longueurs indiquées pour la flèche télescopique sont des valeurs maximales et peuvent légèrement varier dans la réalité.
9. Charges données sous réserve de modification.
10. Les charges supérieures à 295400 lbs/332900 lbs seulement avec moufle additionnel/équipement supplémentaire.
11. Inclinaison latérale ± 0,3°.
12. Les données de cette brochure sont données à titre informatif. Ces renseignements sont sans garantie. Les consignes relatives à la bonne mise en service de la grue sont disponibles dans le manuel d'utilisation et le manuel de tableaux de charge.

Subject to modification / Sous réserve de modifications

Printed in Germany (3)

td-242-04-us05-2019

Liebherr-Werk Ehingen GmbH
Postfach 1361, 89582 Ehingen, Germany
☎ +49 73 91 5 02-0, Fax +49 73 91 5 02-33 99
www.liebherr.com, E-mail: info.lwe@liebherr.com
www.facebook.com/LiebherrConstruction