National Crane Series NBT50

Product Guide

ASME B30.5
Imperial 85%

Features

- 31,1 m (102 ft) four-section full power boom or optional 39,01 m (128 ft) five-section full power boom
- 45,36 t (50 USt) at 2,44 m (8 ft) rating and 49,90 t (55 USt) at 2,44 m (8 ft)
- Self-lubricating Easy Glide wear pads
- Hydraulic removable counterweight system
- Outrigger design eliminates need for SFO

Features

National Crane NBT50

- 45,36 t (50 USt) maximum capacity
- 41,1 m (135 ft) maximum tip height (main boom)
- 54,6 m (179 ft) maximum tip height (boom with extension)

National Crane NBT55

- 49,90 t (55 USt) maximum capacity
- 41,1 m (135 ft) maximum tip height (main boom)
- 54,6 m (179 ft) maximum tip height (boom with extension)

Deluxe operator's cab

The Series NBT50 operator's cab includes all-steel construction with acoustical lining and tinted glass throughout, air conditioning, deluxe seat with arm rest mounted single-axis electric controllers, windshield and sliding skylight with electric wipers, diesel heater with defroster, circulating fan, fire extinguisher, and dual cab mounted work lights.

Counterweight

Two-piece 1360,8 kg (3000 lb) each (total 2721,6 kg [6000 lb]) hydraulically removable counterweight slabs. Removable counterweight slabs can be stowed on front outrigger box for roading.

Outriggers

Equipped with left, right ground level and in-cab outrigger controls. The Series NBT50 outriggers allow quick and easy crane set-up and includes a new outrigger beam position sensing system that aids the operator in selecting the right load chart based on the crane's outrigger footprint. The front outrigger box has an X-shaped footprint that eliminates the need for a single front outrigger.

Dimensions:
Full span:
Front: 7,09 m (23 ft 3 in) Rear: 7,39 m (24 ft 3 in)

Mid span:
Front: 4,72 m (15 ft 6 in) Rear: 4,90 m (16 ft 1 in)

Retracted-front and rear: 2,39 m (7 ft 10 in)

Four or five-section boom

The Series NBT50 can be equipped with two different boom lengths 31,1 m (102 ft) and 39,01 m (128 ft).

Features

Best in class performance and serviceability

The Series NBT50 represents the pinnacle of machine performance, combining the latest in both hydraulic and electronic machine control. This product provides premium operator comfort with the latest Manitowoc cab design, simplified machine setup with no need for an SFO and front bumper control of the hoist(s).

- The cable follower will keep constant tension on the rope reducing the potential for bundling
- Speedy-reeve boom tip and sheave blocks simplify rigging changes by decreasing the time needed to change line reeving
- Easy Glide boom wear pads reduce the conditions that cause boom chatter and vibration. The net result is smoother crane operation
- Pressure compensated, load sensing hydraulic system

  - PTO mounted axial piston pump

  - Superstructure mounted reservoir with integral suction valve/filter, return filter, sight gauge, and temperature gauge

  - Oil cooler with 406 mm (16 in) fan and temperature sensor

  - Pressure transducers integral to the lift cylinder holding valve

**Product may be shown with optional equipment.*

- LMI system features a 178 mm (7 in) graphical, color display. Real-time crane information is displayed with numerous operator features such as soft metric load chart conversion, hydraulic filter change reminders and an electronic hour meter. LMI system also displays key truck diagnostics such as fuel level, coolant temperature and DPF status
- The display console allows each crane control function to be set independently to reduce speed (100%, 75%, 50%, and 30%)
- Dual axis controls are optional for superior operator control, along with standard air conditioning, a diesel heater and ergonomic seats

Contents

Specifications	5
Weights	7
Dimensions	8
Working range - 102 ft boom	9
Load charts - NBT55 102 ft boom, 6000 lb counterweight	10
Load charts - NBT50/55 102 ft boom, 3000 lb counterweight	16
Load charts - NBT50/55 102 ft boom, 0 lb counterweight	22
Working range - 128 ft boom	28
Load charts - NBT55 128 ft boom, 6000 lb counterweight	29
Load charts - NBT50/55 128 ft boom, 3000 lb counterweight	35
Load charts - NBT50/55 128 ft boom, 0 lb counterweight	41
Accessories	47

Specifications

Boom and extension combinations data

NBT50 Series Available in two basic models:

NBT50-102: Equipped with a 9,51 m - 31,1 m (31.2 ft - 102 ft) four-section boom. This model can be equipped with an optional 7,9 m - 13,7 m (26 ft- 45 ft) extension, providing a maximum tip height of 46,9 m (154 ft).

9,51 m - 31,1 m (31.2 ft - 102 ft) four-section boom

FJM-OS 7,9 m - 13,7 m (26 ft - 45 ft) two-section offsettable at 0° and 30° manual extension

NBT50-128: Equipped with a 9,7 m - 39,0 m (31.7 ft - 128 ft) five-section boom. This model can be equipped with an optional 7,9 m - 13,7 m (26 ft - 45 ft) two-section offsettable extension, providing a maximum tip height of 54,6 m (179 ft)

9,7 m - 39,0 m (31.7 ft - 128 ft) five-section full power boom

FJM-0S 7,9 m - 13,7 m (26 ft - 45 ft) two-section offsettable 0° and 30° manual extension

NBT55 - 102: Equipped with a 9,51 m - 31,1 m (31.2 ft - 102 ft) four-section boom. This model can be equipped with an optional 7,9 m - 13,7 m (26 ft- 45 ft) extension, providing a maximum tip height of 46,9 m (154 ft).

9,51 m - 31,1 m (31.2 ft - 102 ft) four-section boom

FJM-OS 7,9 m - 13,7 m (26 ft - 45 ft) two-section offsettable at 0° and 30° manual extension

NBT55-128: Equipped with a 9,7 m - 39,0 m (31.7 ft - 128 ft) five-section boom. This model can be equipped with an optional 7,9 m - 13,7 m (26 ft - 45 ft) two-section offsettable extension, providing a maximum tip height of 54,6 m (179 ft)

9,7 m - 39,0 m (31.7 ft - 128 ft) five-section full power boom

FJM-0S 7,9 m - 13,7 m (26 ft - 45 ft) two-section offsettable 0° and 30° manual extension

Note: Maximum tip is measured with outriggers/stabilizers fully extended.

Specifications

NBT50 and NBT55 winch data

- All winch pulls and speeds are shown on the fourth layer.
- Winch line pulls would increase on the first, second, and third layers.
- Winch line speed would decrease on the first, second, and third layers.
- Winch line pulls may be limited by the winch capacity or the ANSI 5 to 1 cable safety factor.

Standard planetary winch	Cable supplied	Average breaking strength	1 part line max. pull	2 part line max. pull	3 part line max. pull	4 part line max. pull	5 part line max. pull	6 part line max. pull	7 part line max. pull	8 part line max. pull	9 part line max. pull	10 part line max. pull
			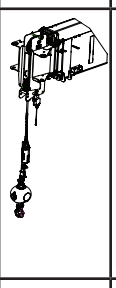				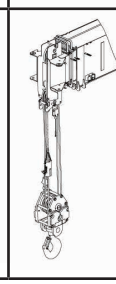		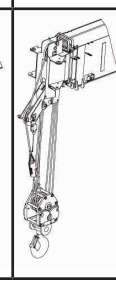	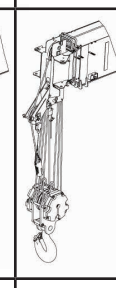	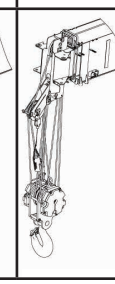	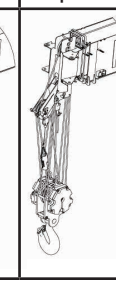
				1 sheave		3 sheave				5 sheave		
Low speed	16 mm (5/8 in) diameter rotation resistant IWRC	25 583 kg (56,400 lb)	5103 kg (11,250 lb) 58,2 m/min (191 fpm)	10 206 kg (22,500 lb) 28,9 m/min (95 fpm)	15 309 kg (33,750 lb) 14,2 m/min (63 fpm)	20 412 kg (45,000 lb) 17,3 m/min (47 fpm)	25 515 kg (56,250 lb) 11,6 m/min (38 fpm)	30 618 kg (67,500 lb) 9,4 m/min (31 fpm)	35 721 kg (78,750 lb) 8,2 m/min (27 fpm)	40 824 kg (90,000 lb) 7,0 m/min (23 fpm)	45 359 kg (100,000 lb) 6,4 m/min (21 fpm)	48 895 kg (110,000 lb) 5,8 m/min (19 fpm)
High speed	16 mm (5/8 in) diameter rotation resistant IWRC	25 583 kg (56,400 lb)	2268 kg (5000 lb) 116,7 m/min (383 fpm)	4536 kg (10,000 lb) 58,2 m/min (191 fpm)	6804 kg (15,000 lb) 38,7 m/min (127 fpm)	9072 kg (20,000 lb) 28,9 m/min (95 fpm)	11 340 kg (25,000 lb) 23,2 m/min (76 fpm)	13 608 kg (30,000 lb) 19,2 m/min (63 fpm)	15 876 kg (35,000 lb) 16,5 m/min (54 fpm)	18 144 kg (40,000 lb) 14,3 m/min (47 fpm)	20 412 kg (45,000 lb) 12,8 m/min (42 fpm)	22 680 kg (50,000 lb) 11,6 m/min (38 fpm)

Winch	Fourth layer pull	Allowable cable pull
Standard planetary and auxiliary planetary	2268 kg (5000 lb) high speed 5117 kg (11,280 lb) low speed	5117 kg (11,280 lb) 5117 kg (11,280 lb)

	Loadline deduct	
	Aux boom nose	36 kg (80 lb)
7 USt	Downhaul weight	78 kg (171 lb)
20 USt	1-sheave block	181 kg (400 lb)
40 USt	3-sheave block	272 kg (500 lb)
55 USt	5-sheave block	498 kg (1098 lb)

Weights

Weight and Center of Gravity (CG) estimates (see notes)				
Standard NBT Configuration	Horizontal CG mm (in)	Weight with fluids kg (lb)	CWT Pinned (# slabs)	CWT Stowed (# slabs)
NBT55102	348 (13.7)	20 789 (45,832)	2	0
NBT55102	803 (31.6)	20 789 (45,832)	1	1
NBT55102	1267 (49.9)	20 789 (45,832)	0	2
NBT50102	616 (24.3)	19 421 (42,816)	1	0
NBT50102	1113 (43.8)	19 421 (42,816)	0	1
NBT50102	1011 (39.8)	17,710 (39,044)	0	0
NBT55128	486 (19.1)	21 837 (48,142)	2	0
NBT55128	919 (36.2)	21 837 (48,142)	1	1
NBT55128	1361 (53.6)	21 837 (48,142)	0	2
NBT50128	749 (29.5)	20 469 (45,126)	1	0
NBT50128	1221 (48.0)	20 469 (45,126)	0	1
NBT50128	1134 (44.6)	18 758 (41,354)	0	0

Weight and CG Estimate Notes:

1. Information provided is for reference only.

2. Weight and CG data is applicable for a standard machine:
   - 102 ft or 128 ft boom
   - 2/3 part lineblock included
   - Main hoist only (auxiliary hoist IPO CWT present)
   - STD decking with fixed access ladder
   - No extension equipped
   - No optional turret access step
   - No auxiliary nose or optional hook blocks.

3. All counterweight configurations are shown in table
   - Pinned = attached to cylinders and turret (in use)
   - Stowed = attached to torsion box (not in use)
   - “2” = Top and bottom slab(s)
   - “1” =Top or bottom slab only
   - “0” = No slab pinned and/or stowed

If both stowed and pinned colums are “0” the counterweight is physically removed from the machine. IPO counterweight is also assumed removed in this case (if no auxiliary hoist is equipped).

For more information about mounting configuration options, please contact the factory or your local National Crane dealer.

Dimensions

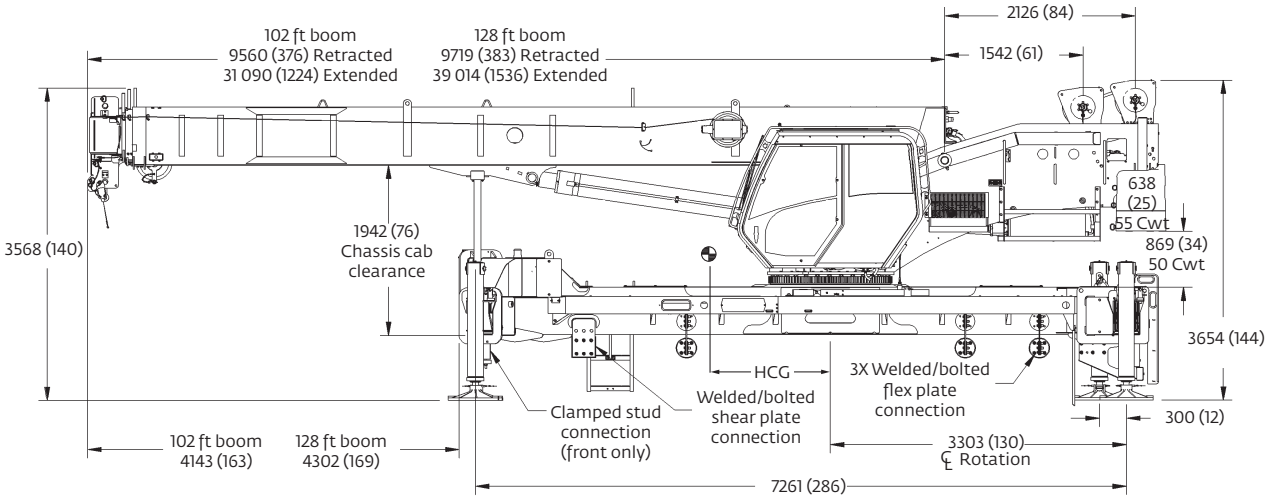
102 ft boom
9560 (376) Retracted
31 090 (1224) Extended
128 ft boom
9719 (383) Retracted
39 014 (1536) Extended
2126 (84)
1542 (61)
638
(25)
55 Cwt
869 (34)
50 Cwt
3654 (144)
3568 (140)
1942 (76)
Chassis cab
clearance
HCG
3X Welded/bolted
flex plate
connection
Welded/bolted
shear plate
connection
Clamped stud
connection
(front only)
300 (12)
102 ft boom
4143 (163)
128 ft boom
4302 (169)
3303 (130)
℄ Rotation
7261 (286)

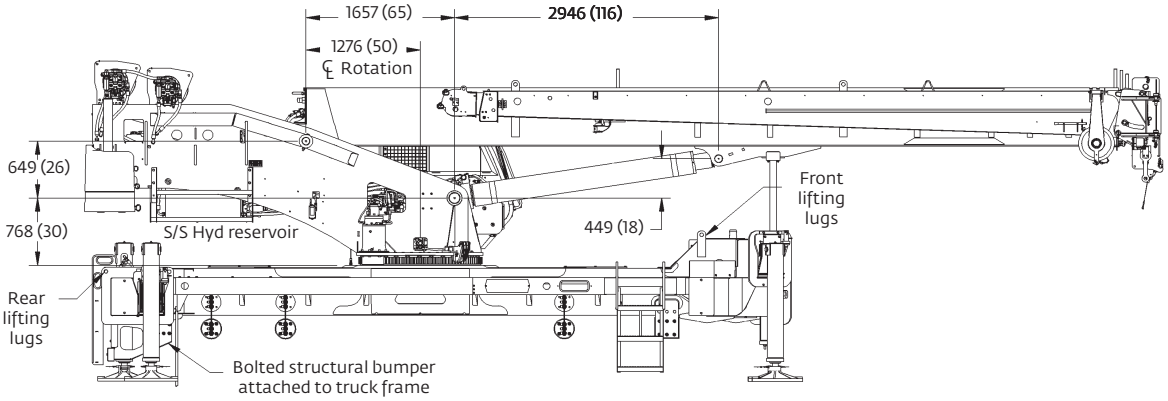
1657 (65)
2946 (116)
1276 (50)
℄ Rotation
649 (26)
768 (30)
S/S Hyd reservoir
449 (18)
Front
lifting
lugs
Rear
lifting
lugs
Bolted structural bumper
attached to truck frame

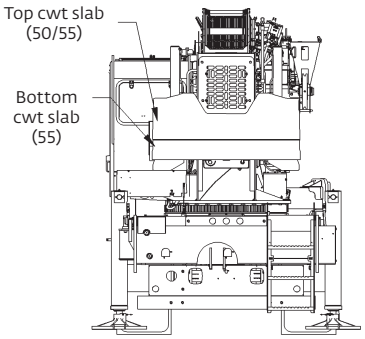
Top cwt slab
(50/55)
Bottom
cwt slab
(55)

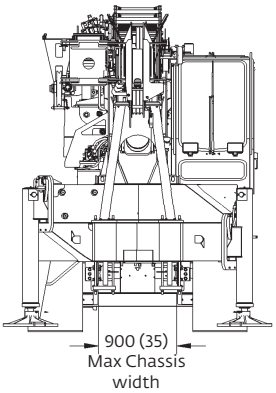
900 (35)
Max Chassis
width

Working range

NBT50/55-128 128 ft main boom, with extensions

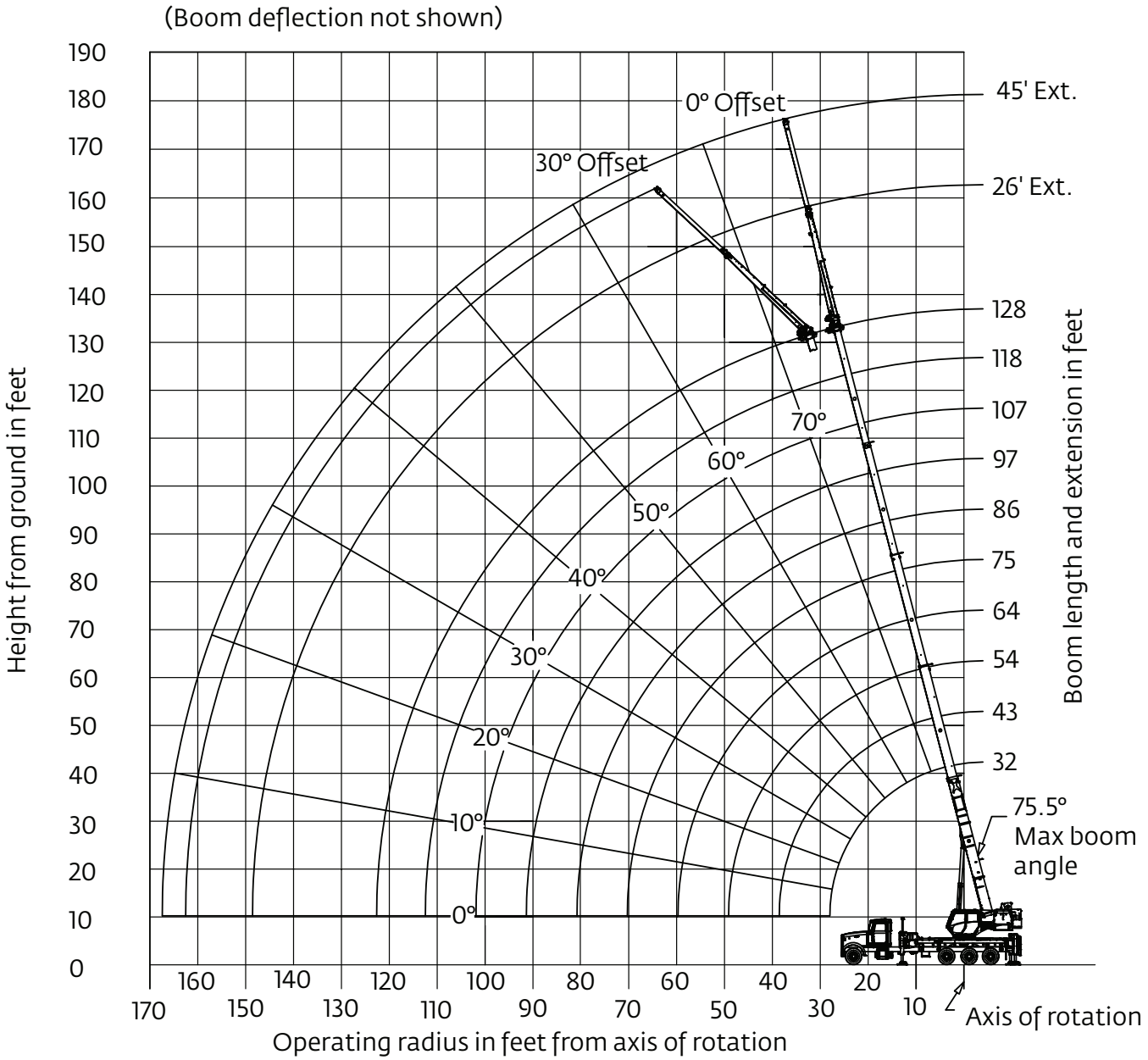

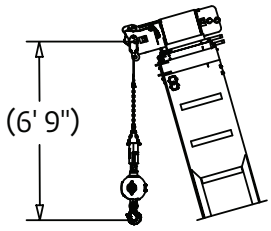

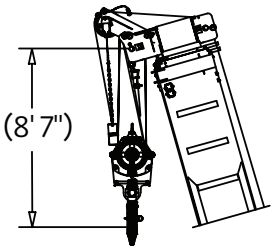

Dimensions are for largest furnished hook block and headache ball with anti-two block activated.

*This drawing shows the physical reach of the machine. Always refer to the load chart to see which portions of this diagram are valid for the specific machine configuration and where the loads are structurally or stability limited.

THIS CHART IS ONLY A GUIDE AND SHOULD NOT BE USED TO OPERATE THE CRANE.
The individual crane's load chart, operating instructions and other instructional plates must be read and understood prior to operating the crane.

Load chart

NBT55

39,0 m (128 ft) | 2722 kg (6000 lb) | 100% | 360°

Radius in feet	#0001									
	Main boom length in feet									
	31.7	43-A	54-B	64-C	75-D	86-E	97-F	107-G	118-H	128
8	110,000 (68.1)									
10	92,300 (64.0)	40,050 (71.3)								
12	81,200 (59.8)	40,050 (68.5)	40,350 (73.3)							
15	65,400 (53.1)	40,050 (64.0)	40,350 (69.9)	40,300 (73.5)						
20	47,750 (40.3)	40,050 (56.2)	40,350 (64.2)	40,300 (68.8)	34,100 (72.5)					
25	31,650 (21.8)	37,700 (47.5)	38,150 (58.0)	37,150 (63.9)	30,100 (68.4)	22,650 (71.5)				
30		30,200 (37.3)	30,700 (51.3)	31,000 (58.6)	27,100 (64.2)	20,400 (68.0)	17,800 (71.2)			
35		22,300 (23.6)	25,100 (43.9)	25,350 (53.1)	24,600 (59.8)	18,500 (64.3)	16,300 (68.0)	14,700 (70.8)	12,900 (73.2)	
40			20,700 (35.2)	21,050 (47.0)	21,350 (55.1)	17,050 (60.5)	15,100 (64.7)	13,650 (68.0)	12,050 (70.8)	10,850 (73.0)
45			*16,400 (24.0)	16,950 (40.3)	17,200 (50.0)	15,800 (56.5)	14,000 (61.5)	12,550 (65.0)	11,300 (68.2)	10,250 (70.8)
50				13,900 (32.4)	14,150 (44.6)	14,400 (52.3)	12,850 (58.0)	11,750 (62.0)	10,650 (65.8)	9650 (68.4)
55				11,600 (22.2)	11,850 (38.6)	12,050 (47.8)	12,000 (54.4)	10,950 (59.2)	10,000 (63.2)	8750 (65.9)
60					10,100 (32.4)	10,300 (43.3)	10,450 (50.8)	10,300 (56.0)	9400 (60.4)	7850 (63.3)
65					8550 (23.9)	8750 (37.9)	8950 (46.6)	9100 (52.4)	8850 (57.5)	7000 (60.6)
70					*4650 (9.2)	7500 (31.8)	7650 (42.1)	7800 (48.7)	7950 (54.3)	6300 (57.9)
75						6450 (24.3)	6600 (37.2)	6750 (44.7)	6850 (51.0)	5700 (55.0)
80						*4400 (12.8)	5700 (31.6)	5800 (40.5)	5950 (47.5)	5150 (52.1)
85							4900 (24.8)	5000 (35.8)	5150 (43.8)	4650 (49.0)
90							*3850 (15.3)	4300 (30.4)	4450 (39.8)	4150 (45.7)
95								3700 (24.0)	3800 (35.4)	3700 (42.2)
100								*2800 (14.9)	3300 (30.5)	3300 (38.4)
105									2800 (24.6)	2850 (34.2)
110									2350 (16.8)	2450 (29.5)
115										*1900 (23.7)
120										*1100 (15.8)
Minimum boom angle (°) for indicated length (no load)							0	5	8	10
Maximum boom length (ft) at 0° boom angle (no load)							97			

NOTE: ( ) Boom angles are in degrees.
*Loads are structurally limited.
#LMI operating code. Refer to LMI manual for operating instructions.

Lifting capacities at zero degree boom angle										
Boom angle	Main boom length in feet									
	31.7	43-A	54-B	64-C	75-D	86-E				
0°	12,900 (27.5)	7600 (38.8)	4850 (19.8)	3700 (59.8)	2200 (70.8)	1150 (81.8)				

NOTE: ( ) Reference radii in feet. 80034324

THIS CHART IS ONLY A GUIDE AND SHOULD NOT BE USED TO OPERATE THE CRANE.
The individual crane's load chart, operating instructions and other instructional plates must be read and understood prior to operating the crane.

Load chart

NBT55

39,0 m
(128 ft)

Jib Stowed

2722 kg
(6000 lb)

100%

360°

Radius in feet	#0002									
	Main boom length in feet									
	31.7	43-A	54-B	64-C	75-D	86-E	97-F	107-G	118-H	128
8	108,850 (68.1)									
10	91,150 (64.0)	39,250 (71.3)								
12	80,050 (59.8)	39,250 (68.5)	39,250 (73.3)							
15	64,250 (53.1)	39,250 (64.0)	39,250 (69.9)	39,250 (73.5)						
20	46,600 (40.3)	39,250 (56.2)	39,250 (64.2)	39,250 (68.8)	33,650 (72.5)					
25	30,500 (21.8)	36,900 (47.5)	37,550 (58.0)	36,650 (63.9)	29,650 (68.4)	22,250 (71.5)				
30		29,400 (37.3)	30,100 (51.3)	30,500 (58.6)	26,650 (64.2)	20,000 (68.0)	17,450 (71.2)			
35		21,500 (23.6)	24,500 (43.9)	24,850 (53.1)	24,150 (59.8)	18,100 (64.3)	15,950 (68.0)	14,400 (70.8)	12,600 (73.2)	
40			20,100 (35.2)	20,550 (47.0)	20,900 (55.1)	16,650 (60.5)	14,750 (64.7)	13,350 (68.0)	11,750 (70.8)	10,600 (73.0)
45			15,800 (24.0)	16,450 (40.3)	16,750 (50.0)	15,400 (56.5)	13,650 (61.5)	12,250 (65.0)	11,000 (68.2)	10,000 (70.8)
50				13,400 (32.4)	13,700 (44.6)	14,000 (52.3)	12,500 (58.0)	11,450 (62.0)	10,350 (65.8)	9400 (68.4)
55				11,100 (22.2)	11,400 (38.6)	11,650 (47.8)	11,650 (54.4)	10,650 (59.2)	9700 (63.2)	8500 (65.9)
60					9650 (32.4)	9900 (43.3)	10,100 (50.8)	10,000 (56.0)	9100 (60.4)	7600 (63.3)
65					8100 (23.9)	8350 (37.9)	8600 (46.6)	8800 (52.4)	8550 (57.5)	6750 (60.6)
70					*4200 (9.2)	7100 (31.8)	7300 (42.1)	7500 (48.7)	7650 (54.3)	6050 (57.9)
75						6050 (24.3)	6250 (37.2)	6450 (44.7)	6550 (51.0)	5450 (55.0)
80						*4000 (12.8)	5350 (31.6)	5500 (40.5)	5650 (47.5)	4900 (52.1)
85							4550 (24.8)	4700 (35.8)	4850 (43.8)	4400 (49.0)
90							*3500 (15.3)	4000 (30.4)	4150 (39.8)	3900 (45.7)
95								3400 (24.0)	3500 (35.4)	3450 (42.2)
100								*2500 (14.9)	3000 (30.5)	3050 (38.4)
105									2500 (24.6)	2600 (34.2)
110									2050 (16.8)	2200 (29.5)
115										*1650 (23.7)
120										*850 (15.8)
Minimum boom angle (°) for indicated length (no load)							0	5	8	10
Maximum boom length (ft) at 0° boom angle (no load)							97			

NOTE: ( ) Boom angles are in degrees.
*Loads are structurally limited.
#LMI operating code. Refer to LMI manual for operating instructions.

Lifting capacities at zero degree boom angle										
Boom angle	Main boom length in feet									
	31.7	43-A	54-B	64-C	75-D	86-E				
0°	11,750 (27.5)	6,800 (38.8)	4,250 (19.8)	3,200 (59.8)	1,750 (70.8)	750 (81.8)				

NOTE: ( ) Reference radii in feet.

80034325

THIS CHART IS ONLY A GUIDE AND SHOULD NOT BE USED TO OPERATE THE CRANE.
The individual crane's load chart, operating instructions and other instructional plates must be read and understood prior to operating the crane.

NBT55

39,0 m (128 ft) | 2722 kg (6000 lb) | 100% | Over Rear

Radius in feet	#0003 Main boom length in feet									
	31.7	43-A	54-B	64-C	75-D	86-E	97-F	107-G	118-H	128
8	110,000 (68.1)									
10	92,300 (64.0)	40,050 (71.3)								
12	81,200 (59.8)	40,050 (68.5)	40,350 (73.3)							
15	65,400 (53.1)	40,050 (64.0)	40,350 (69.9)	40,300 (73.5)						
20	47,750 (40.3)	40,050 (56.2)	40,350 (64.2)	40,300 (68.8)	34,100 (72.5)					
25	31,650 (21.8)	37,700 (47.5)	38,150 (58.0)	37,150 (63.6)	30,100 (68.4)	22,650 (71.5)				
30		30,200 (37.3)	30,700 (51.3)	31,000 (58.3)	27,100 (64.2)	20,400 (67.8)	17,800 (71.2)			
35		22,300 (23.6)	25,100 (43.9)	25,350 (52.7)	24,600 (59.8)	18,500 (64.0)	16,300 (68.0)	14,700 (70.8)	12,900 (73.2)	
40			20,950 (35.2)	21,250 (47.3)	21,500 (55.1)	17,050 (60.4)	15,100 (64.8)	13,650 (68.0)	12,050 (70.8)	10,850 (73.0)
45			16,400 (24.0)	18,000 (40.7)	18,250 (50.1)	15,800 (56.4)	14,000 (61.5)	12,550 (65.0)	11,300 (68.2)	10,250 (70.8)
50				15,250 (33.0)	15,500 (44.7)	14,600 (52.1)	12,850 (58.0)	11,750 (62.0)	10,650 (65.8)	9650 (68.4)
55				*11,900 (23.2)	13,100 (38.7)	13,300 (47.6)	12,000 (54.4)	10,950 (59.2)	10,000 (63.2)	8750 (65.9)
60					11,200 (32.5)	11,400 (42.8)	11,250 (50.5)	10,300 (56.0)	9400 (60.4)	7850 (63.3)
65					9700 (23.9)	9900 (37.4)	10,100 (46.8)	9700 (52.6)	8850 (57.5)	7000 (60.6)
70					*4650 (9.2)	8600 (31.3)	8750 (42.3)	8900 (48.9)	8400 (54.5)	6300 (57.9)
75						7450 (23.8)	7600 (37.3)	7750 (45.0)	7900 (51.3)	5700 (55.0)
80						*4400 (12.6)	6650 (31.7)	6800 (40.7)	6900 (47.8)	5150 (52.1)
85							5800 (25.0)	5950 (36.0)	6050 (44.1)	4650 (49.0)
90							*3850 (15.3)	5200 (30.7)	5300 (40.1)	4150 (45.7)
95								4550 (24.2)	4650 (35.7)	3700 (42.2)
100								*2800 (14.9)	4050 (30.8)	3300 (38.4)
105									3550 (24.9)	3000 (34.3)
110									*2400 (16.8)	2650 (29.6)
115										1900 (23.7)
120										1100 (15.8)
Minimum boom angle (°) for indicated length (no load)							0	5	8	10
Maximum boom length (ft) at 0° boom angle (no load)							97			

NOTE: ( ) Boom angles are in degrees.
*Loads are structurally limited.
#LMI operating code. Refer to LMI manual for operating instructions.

Lifting capacities at zero degree boom angle										
Boom angle	Main boom length in feet									
	31.7	43-A	54-B	64-C	75-D	86-E				
0°	12,900 (27.5)	7600 (38.8)	4850 (19.8)	3700 (59.8)	2200 (70.8)	1150 (81.8)				

NOTE: ( ) Reference radii in feet. 80034328

THIS CHART IS ONLY A GUIDE AND SHOULD NOT BE USED TO OPERATE THE CRANE.
The individual crane's load chart, operating instructions and other instructional plates must be read and understood prior to operating the crane.

Load chart

NBT55

39,0 m (128 ft) | Jib Stowed | 2722 kg (6000 lb) | 100% | Over Rear

Radius in feet	#0004									
	Main boom length in feet									
	31.7	43-A	54-B	64-C	75-D	86-E	97-F	107-G	118-H	128
8	108,850 (68.1)									
10	91,150 (64.0)	39,250 (71.3)								
12	80,050 (59.8)	39,250 (68.5)	39,250 (73.3)							
15	64,250 (53.1)	39,250 (64.0)	39,250 (69.9)	39,250 (73.5)						
20	46,600 (40.3)	39,250 (56.2)	39,250 (64.2)	39,250 (68.8)	33,650 (72.5)					
25	30,500 (21.8)	36,900 (47.5)	37,550 (58.0)	36,650 (63.9)	29,650 (68.4)	22,250 (71.5)				
30		29,400 (37.3)	30,100 (51.3)	30,500 (58.6)	26,650 (64.2)	20,000 (68.0)	17,450 (71.2)			
35		21,500 (23.6)	24,500 (43.9)	24,850 (53.1)	24,150 (59.8)	18,100 (64.3)	15,950 (68.0)	14,400 (70.8)	12,600 (73.2)	
40			20,350 (35.2)	20,750 (47.0)	21,050 (55.1)	16,650 (60.5)	14,750 (64.8)	13,350 (68.0)	11,750 (70.8)	10,600 (73.0)
45			15,800 (24.0)	17,500 (40.3)	17,800 (50.1)	15,400 (56.5)	13,650 (61.5)	12,250 (65.0)	11,000 (68.2)	10,000 (70.8)
50				14,750 (32.4)	15,050 (44.7)	14,200 (52.1)	12,500 (58.0)	11,450 (62.0)	10,350 (65.8)	9400 (68.4)
55				*11,400 (22.2)	12,650 (38.7)	12,900 (47.6)	11,650 (54.4)	10,650 (59.2)	9700 (63.2)	8500 (65.9)
60					10,750 (32.5)	11,000 (42.8)	10,900 (50.5)	10,000 (56.0)	9100 (60.4)	7600 (63.3)
65					9250 (23.9)	9500 (37.4)	9750 (46.8)	9400 (52.6)	8550 (57.5)	6750 (60.6)
70					*4200 (9.2)	8200 (31.3)	8400 (42.3)	8600 (48.9)	8100 (54.5)	6050 (57.9)
75						7050 (23.8)	7250 (37.3)	7450 (45.0)	7600 (51.3)	5450 (55.0)
80						*4000 (12.6)	6300 (31.7)	6500 (40.7)	6600 (47.8)	4900 (52.1)
85							5450 (25.0)	5650 (36.0)	5750 (44.1)	4400 (49.0)
90							*3500 (15.3)	4900 (30.7)	5000 (40.1)	3900 (45.7)
95								4250 (24.2)	4350 (35.7)	3450 (42.2)
100								*2500 (14.9)	3750 (30.8)	3050 (38.4)
105									3250 (24.9)	2750 (34.3)
110									*2100 (16.8)	2400 (29.6)
115										1650 (23.7)
120										850 (15.8)
Minimum boom angle (°) for indicated length (no load)							0	5	8	10
Maximum boom length (ft) at 0° boom angle (no load)							97			

NOTE: ( ) Boom angles are in degrees.
*Loads are structurally limited.
#LMI operating code. Refer to LMI manual for operating instructions.

Lifting capacities at zero degree boom angle										
Boom angle	Main boom length in feet									
	31.7	43-A	54-B	64-C	75-D	86-E				
0°	11,750 (27.5)	6800 (38.8)	4250 (19.8)	3200 (59.8)	1750 (70.8)	750 (81.8)				

NOTE: ( ) Reference radii in feet. 80034329

THIS CHART IS ONLY A GUIDE AND SHOULD NOT BE USED TO OPERATE THE CRANE.
The individual crane's load chart, operating instructions and other instructional plates must be read and understood prior to operating the crane.

NBT55

7,9 m - 13,7 m (26 ft - 45 ft)	2722 kg (6000 lb)	100%	360°

Radius in feet	26 ft LENGTH		45 ft LENGTH	
	#0005	#0007	#0009	#0011
	0° OFFSET	30° OFFSET	0° OFFSET	30° OFFSET
50	6000 (72.6)			
55	5800 (70.8)			
60	5500 (69.0)			
65	5200 (67.0)	4900 (72.1)	4050 (70.4)	
70	4850 (65.0)	4650 (69.9)	4000 (68.8)	
75	4500 (62.9)	4400 (67.7)	3950 (67.2)	2800 (73.8)
80	4250 (60.8)	4150 (65.4)	3900 (65.6)	2700 (71.9)
85	3950 (58.6)	4000 (63.1)	3800 (63.9)	2650 (70.0)
90	3800 (56.4)	3800 (60.7)	3550 (62.0)	2600 (68.0)
95	3650 (54.1)	3650 (58.3)	3250 (59.9)	2550 (66.0)
100	3150 (51.5)	3350 (55.6)	3000 (57.8)	2500 (63.9)
105	2600 (48.6)	2900 (52.6)	2700 (55.6)	2450 (61.8)
110	2100 (45.7)	2550 (49.6)	2500 (53.5)	2400 (59.5)
115	1700 (42.6)	2100 (46.3)	2300 (51.2)	2350 (57.2)
120	1350 (39.4)	*1650 (42.8)	2050 (48.7)	2300 (54.7)
125	950 (35.9)	*1200 (39.0)	1750 (46.1)	2250 (52.1)
130	650 (32.1)	*850 (34.8)	1500 (43.4)	2000 (49.1)
135		*450 (30.0)	1200 (40.4)	1600 (45.7)
140			900 (37.3)	1250 (42.2)
145			650 (33.9)	*900 (38.3)
150				*600 (33.9)
Min. boom angle for indicated length (no load)	29°	30°	30°	31°
Max. boom length at 0° boom angle (no load)	64 ft		64 ft	

NOTE: ( ) Boom angles are in degrees. 80034336

#LMI operating code. Refer to LMI manual for instructions.
*Loads are structurally limited.

Boom extension capacity notes:

1. All capacities above the bold line are based on structural strength limitations.
2. 26 ft and 45 ft extension lengths may be used for single line lifting service.
3. Radii listed are for a fully extended boom with the boom extension erected. For main boom lengths less than fully extended, the rated loads are determined by boom angle. Use only the column which corresponds to the boom extension length and offset for which the machine is configured. For boom angles not shown, use the rating of the next lower boom angle.

   Warning: Operation of this machine with heavier loads than the capacities listed is strictly prohibited. Machine tipping with boom extension occurs rapidly and without advance warning.
4. Boom angle is the angle above or below horizontal of the longitudinal axis of the boom base section after lifting rated load.
5. Capacities listed are with outriggers properly extended and vertical jacks set only.

Load chart

NBT55

7,9 m - 13,7 m (26 ft - 45 ft)	2722 kg (6000 lb)	100%	Over Rear

Radius in feet	26 ft LENGTH		45 ft LENGTH	
	#0006	#0008	#0010	#0012
	0° OFFSET	30° OFFSET	0° OFFSET	30° OFFSET
50	6000 (72.6)			
55	5800 (70.8)			
60	5500 (69.0)			
65	5200 (67.0)	4900 (72.1)	4050 (70.4)	
70	4850 (65.0)	4650 (69.9)	4000 (68.8)	
75	4500 (62.9)	4400 (67.7)	3950 (67.2)	2800 (73.8)
80	4250 (60.8)	4150 (65.4)	3900 (65.6)	2700 (71.9)
85	3950 (58.6)	4000 (63.1)	3800 (63.9)	2650 (70.0)
90	3800 (56.4)	3800 (60.7)	3550 (62.0)	2600 (68.0)
95	3650 (54.1)	3650 (58.3)	3250 (59.9)	2550 (66.0)
100	3150 (51.5)	3350 (55.6)	3000 (57.8)	2500 (63.9)
105	2600 (48.6)	2900 (52.6)	2700 (55.6)	2450 (61.8)
110	2100 (45.7)	2550 (49.6)	2500 (53.5)	2400 (59.5)
115	1700 (42.6)	2150 (46.3)	2300 (51.2)	2350 (57.2)
120	1350 (39.4)	1650 (42.8)	2050 (48.7)	2300 (54.7)
125	950 (35.9)	1200 (39.0)	1750 (46.1)	2250 (52.1)
130	650 (32.1)	850 (34.8)	1500 (43.4)	2200 (49.3)
135		450 (30.0)	1200 (40.4)	1750 (45.9)
140			900 (37.3)	1350 (42.3)
145			650 (33.9)	900 (38.3)
150				600 (33.9)
Min. boom angle for indicated length (no load)	29°	30°	30°	31°
Max. boom length at 0° boom angle (no load)	64 ft		64 ft	

NOTE: ( ) Boom angles are in degrees. 80034337

#LMI operating code. Refer to LMI manual for instructions.

Boom extension capacity notes:

1. All capacities above the bold line are based on structural strength limitations.
2. 26 ft and 45 ft extension lengths may be used for single line lifting service.
3. Radii listed are for a fully extended boom with the boom extension erected. For main boom lengths less than fully extended, the rated loads are determined by boom angle. Use only the column which corresponds to the boom extension length and offset for which the machine is configured. For boom angles not shown, use the rating of the next lower boom angle.

   Warning: Operation of this machine with heavier loads than the capacities listed is strictly prohibited. Machine tipping with boom extension occurs rapidly and without advance warning.
4. Boom angle is the angle above or below horizontal of the longitudinal axis of the boom base section after lifting rated load.
5. Capacities listed are with outriggers properly extended and vertical jacks set only.

THIS CHART IS ONLY A GUIDE AND SHOULD NOT BE USED TO OPERATE THE CRANE.
The individual crane's load chart, operating instructions and other instructional plates must be read and understood prior to operating the crane.

NBT50/55

39,0 m (128 ft) | 1361 kg (3000 lb) | 100% | 360°

Radius in feet	#0001									
	Main boom length in feet									
	31.7	43-A	54-B	64-C	75-D	86-E	97-F	107-G	118-H	128
8	100,000 (68.1)									
10	92,250 (64.0)	40,050 (71.3)								
12	80,100 (59.8)	40,050 (68.5)	40,350 (73.3)							
15	63,450 (53.1)	40,050 (64.0)	40,350 (69.9)	40,300 (73.5)						
20	46,300 (40.2)	40,050 (56.2)	40,350 (64.2)	40,300 (68.8)	34,100 (72.5)					
25	31,650 (21.8)	36,500 (47.5)	36,950 (57.9)	37,150 (63.9)	30,100 (68.4)	22,650 (71.5)				
30		28,950 (37.3)	29,400 (51.2)	29,700 (58.6)	27,100 (64.2)	20,400 (68.0)	17,800 (71.2)			
35		22,300 (23.6)	23,900 (43.8)	24,300 (53.0)	24,550 (59.8)	18,500 (64.3)	16,300 (68.0)	14,700 (70.8)	12,900 (73.2)	
40			18,600 (35.2)	18,950 (47.0)	19,250 (55.0)	17,050 (60.5)	15,100 (64.8)	13,650 (68.0)	12,050 (70.8)	10,850 (73.0)
45			14,800 (24.0)	15,150 (40.2)	15,450 (50.0)	15,650 (56.5)	14,000 (61.5)	12,550 (65.0)	11,300 (68.2)	10,250 (70.8)
50				12,350 (32.4)	12,600 (44.5)	12,800 (52.2)	12,850 (58.0)	11,750 (62.0)	10,650 (65.8)	9650 (68.4)
55				10,300 (23.3)	10,600 (39.2)	10,800 (48.1)	11,000 (54.6)	10,950 (59.2)	10,000 (63.2)	8750 (65.9)
60					8850 (32.3)	9050 (43.2)	9250 (50.6)	9400 (55.8)	9400 (60.4)	7850 (63.3)
65					7450 (23.8)	7650 (37.8)	7800 (46.4)	7950 (52.2)	8100 (57.3)	7000 (60.6)
70					*4650 (9.2)	6500 (31.7)	6650 (41.9)	6800 (48.5)	6900 (54.0)	6300 (57.9)
75						5500 (24.2)	5650 (37.0)	5800 (44.5)	5900 (50.7)	5700 (55.0)
80						*4400 (12.8)	4800 (31.4)	4950 (40.2)	5050 (47.2)	5150 (52.1)
85							4100 (24.7)	4200 (35.6)	4300 (43.5)	4400 (48.9)
90							3450 (15.2)	3550 (30.2)	3650 (39.5)	3750 (45.5)
95								3000 (23.8)	3100 (35.2)	3200 (42.0)
100								2500 (14.8)	2600 (30.2)	2700 (38.1)
105									2150 (24.4)	2250 (33.9)
110									1750 (16.6)	1800 (29.2)
115										1450 (23.5)
120										*1100 (15.8)
Minimum boom angle (°) for indicated length (no load)							0	5	8	10
Maximum boom length (ft.) at 0° boom angle (no load)							97			

NOTE: ( ) Boom angles are in degrees.
*Loads are structurally limited.
#LMI operating code. Refer to LMI manual for operating instructions.

Lifting capacities at zero degree boom angle										
Boom angle	Main boom length in feet									
	31.7	43-A	54-B	64-C	75-D	86-E				
0°	12,900 (27.5)	7600 (38.8)	4850 (19.8)	3700 (59.8)	2200 (70.8)	1150 (81.8)				

NOTE: ( ) Reference radii in feet. 80034844A

THIS CHART IS ONLY A GUIDE AND SHOULD NOT BE USED TO OPERATE THE CRANE.
The individual crane's load chart, operating instructions and other instructional plates must be read and understood prior to operating the crane.

Load chart

NBT50/55

39,0 m (128 ft) | Jib Stowed | 1361 kg (3000 lb) | 100% | 360°

Radius in feet	#0002									
	Main boom length in feet									
	31.7	43-A	54-B	64-C	75-D	86-E	97-F	107-G	118-H	128
8	98,850 (68.1)									
10	91,100 (64.0)	39,250 (71.3)								
12	78,950 (59.8)	39,250 (68.5)	39,250 (73.3)							
15	62,300 (53.1)	39,250 (64.0)	39,250 (69.9)	39,250 (73.5)						
20	45,150 (40.2)	39,250 (56.2)	39,250 (64.2)	39,250 (68.8)	33,650 (72.5)					
25	30,500 (21.8)	35,700 (47.5)	36,350 (57.9)	36,650 (63.9)	29,650 (68.4)	22,250 (71.5)				
30		28,150 (37.3)	28,800 (51.2)	29,200 (58.6)	26,650 (64.2)	20,000 (68.0)	17,450 (71.2)			
35		21,500 (23.6)	23,300 (43.8)	23,800 (53.0)	24,100 (59.8)	18,100 (64.3)	15,950 (68.0)	14,400 (70.8)	12,600 (73.2)	
40			18,000 (35.2)	18,450 (47.0)	18,800 (55.0)	16,650 (60.5)	14,750 (64.8)	13,350 (68.0)	11,750 (70.8)	10,600 (73.0)
45			14,200 (24.0)	14,650 (40.2)	15,000 (50.0)	15,250 (56.5)	13,650 (61.5)	12,250 (65.0)	11,000 (68.2)	10,000 (70.8)
50				11,850 (32.4)	12,150 (44.5)	12,400 (52.2)	12,500 (58.0)	11,450 (62.0)	10,350 (65.8)	9400 (68.4)
55				9800 (23.3)	10,150 (39.2)	10,400 (48.1)	10,650 (54.6)	10,650 (59.2)	9700 (63.2)	8500 (65.9)
60					8400 (32.3)	8650 (43.2)	8900 (50.6)	9100 (55.8)	9100 (60.4)	7600 (63.3)
65					7000 (23.8)	7250 (37.8)	7450 (46.4)	7650 (52.2)	7800 (57.3)	6750 (60.6)
70					*4200 (9.2)	6100 (31.7)	6300 (41.9)	6500 (48.5)	6600 (54.0)	6050 (57.9)
75						5100 (24.2)	5300 (37.0)	5500 (44.5)	5600 (50.7)	5450 (55.0)
80						*4000 (12.8)	4450 (31.4)	4650 (40.2)	4750 (47.2)	4900 (52.1)
85							3750 (24.7)	3900 (35.6)	4000 (43.5)	4150 (48.9)
90							3100 (15.2)	3250 (30.2)	3350 (39.5)	3500 (45.5)
95								2700 (23.8)	2800 (35.2)	2950 (42.0)
100								2200 (14.8)	2300 (30.2)	2,450 (38.1)
105									1850 (24.4)	2000 (33.9)
110									1450 (16.6)	1550 (29.2)
115										1200 (23.5)
120										*850 (15.8)
Minimum boom angle (°) for indicated length (no load)							0	5	8	10
Maximum boom length (ft) at 0° boom angle (no load)							97			

NOTE: ( ) Boom angles are in degrees.
*Loads are structurally limited.
#LMI operating code. Refer to LMI manual for operating instructions.

Lifting capacities at zero degree boom angle										
Boom angle	Main boom length in feet									
	31.7	43-A	54-B	64-C	75-D	86-E				
0°	11,750 (27.5)	6800 (38.8)	4250 (19.8)	3200 (59.8)	1750 (70.8)	750 (81.8)				

NOTE: ( ) Reference radii in feet. 80034845A

THIS CHART IS ONLY A GUIDE AND SHOULD NOT BE USED TO OPERATE THE CRANE.
The individual crane's load chart, operating instructions and other instructional plates must be read and understood prior to operating the crane.

NBT50/55

39,0 m (128 ft) | 1361 kg (3000 lb) | 100% | Over Rear

Radius in feet	#0003									
	Main boom length in feet									
	31.7	43-A	54-B	64-C	75-D	86-E	97-F	107-G	118-H	128
8	100,000 (68.1)									
10	92,250 (64.0)	40,050 (71.3)								
12	80,100 (59.8)	40,050 (68.5)	40,350 (73.3)							
15	63,450 (53.1)	40,050 (64.0)	40,350 (69.9)	40,300 (73.5)						
20	46,300 (40.2)	40,050 (56.2)	40,350 (64.2)	40,300 (68.8)	34,100 (72.5)					
25	31,650 (21.8)	36,500 (47.5)	36,950 (57.9)	37,150 (63.9)	30,100 (68.4)	22,650 (71.5)				
30		28,950 (37.3)	29,400 (51.2)	29,700 (58.6)	27,100 (64.2)	20,400 (68.0)	17,800 (71.2)			
35		22,300 (23.6)	24,000 (43.8)	24,300 (53.0)	24,550 (59.8)	18,500 (64.3)	16,300 (68.0)	14,700 (70.8)	12,900 (73.2)	
40			20,000 (35.2)	20,300 (47.0)	20,550 (55.1)	17,050 (60.5)	15,100 (64.8)	13,650 (68.0)	12,050 (70.8)	10,850 (73.0)
45			16,400 (24.0)	16,800 (40.3)	17,050 (50.0)	15,800 (56.5)	14,000 (61.5)	12,550 (65.0)	11,300 (68.2)	10,250 (70.8)
50				13,900 (32.4)	14,150 (44.6)	14,350 (52.3)	12,850 (58.0)	11,750 (62.0)	10,650 (65.8)	9650 (68.4)
55				11,650 (22.2)	11,900 (38.6)	12,100 (47.8)	12,000 (54.4)	10,950 (59.2)	10,000 (63.2)	8750 (65.9)
60					10,200 (32.4)	10,400 (43.3)	10,550 (50.8)	10,300 (56.0)	9400 (60.4)	7850 (63.3)
65					8700 (23.9)	8900 (38.0)	9050 (46.6)	9200 (52.5)	8850 (57.5)	7000 (60.6)
70					*4650 (9.2)	7650 (31.8)	7850 (42.1)	7950 (48.7)	8100 (54.4)	6300 (57.9)
75						6600 (24.3)	6750 (37.2)	6900 (44.8)	7000 (51.0)	5700 (55.0)
80						*4400 (12.8)	5850 (31.6)	6,000 (40.5)	6100 (47.5)	5150 (52.1)
85							5100 (24.9)	5200 (35.8)	5300 (43.8)	4650 (49.0)
90							*3850 (15.3)	4500 (30.5)	4600 (39.8)	4150 (45.7)
95								3900 (24.1)	4000 (35.5)	3700 (42.2)
100								*2800 (14.9)	3450 (30.5)	3300 (38.4)
105									2950 (24.7)	3000 (34.3)
110									*2400 (16.8)	2600 (29.5)
115										*1900 (23.7)
120										*1100 (15.8)
Minimum boom angle (°) for indicated length (no load)							0	5	8	10
Maximum boom length (ft.) at 0° boom angle (no load)							97			

NOTE: ( ) Boom angles are in degrees.
*Loads are structurally limited.
#LMI operating code. Refer to LMI manual for operating instructions.

Lifting capacities at zero degree boom angle										
Boom angle	Main boom length in feet									
	31.7	43-A	54-B	64-C	75-D	86-E				
0°	12,900 (27.5)	7600 (38.8)	4850 (19.8)	3700 (59.8)	2200 (70.8)	1150 (81.8)				

NOTE: ( ) Reference radii in feet. 80034849A

THIS CHART IS ONLY A GUIDE AND SHOULD NOT BE USED TO OPERATE THE CRANE.
The individual crane's load chart, operating instructions and other instructional plates must be read and understood prior to operating the crane.

Load chart

NBT50/55

39,0 m (128 ft) | Jib Stowed | 1361 kg (3000 lb) | 100% | Over Rear

Radius in feet	#0004									
	Main boom length in feet									
	31.7	43-A	54-B	64-C	75-D	86-E	97-F	107-G	118-H	128
8	98,850 (68.1)									
10	91,100 (64.0)	39,250 (71.3)								
12	78,950 (59.8)	39,250 (68.5)	39,250 (73.3)							
15	62,300 (53.1)	39,250 (64.0)	39,250 (69.9)	39,250 (73.5)						
20	45,150 (40.2)	39,250 (56.2)	39,250 (64.2)	39,250 (68.8)	33,650 (72.5)					
25	30,500 (21.8)	35,700 (47.5)	36,350 (57.9)	36,650 (63.9)	29,650 (68.4)	22,250 (71.5)				
30		28,150 (37.3)	28,800 (51.2)	29,200 (58.6)	26,650 (64.2)	20,000 (68.0)	17,450 (71.2)			
35		21,500 (23.6)	23,400 (43.8)	23,800 (53.0)	24,100 (59.8)	18,100 (64.3)	15,950 (68.0)	14,400 (70.8)	12,600 (73.2)	
40			19,400 (35.2)	19,800 (47.0)	20,100 (55.1)	16,650 (60.5)	14,750 (64.8)	13,350 (68.0)	11,750 (70.8)	10,600 (73.0)
45			15,800 (24.0)	16,300 (40.3)	16,600 (50.0)	15,400 (56.5)	13,650 (61.5)	12,250 (65.0)	11,000 (68.2)	10,000 (70.8)
50				13,400 (32.4)	13,700 (44.6)	13,950 (52.3)	12,500 (58.0)	11,450 (62.0)	10,350 (65.8)	9400 (68.4)
55				11,150 (22.2)	11,450 (38.6)	11,700 (47.8)	11,650 (54.4)	10,650 (59.2)	9700 (63.2)	8500 (65.9)
60					9750 (32.4)	10,000 (43.3)	10,200 (50.8)	10,000 (56.0)	9100 (60.4)	7600 (63.3)
65					8250 (23.9)	8500 (38.0)	8700 (46.6)	8900 (52.5)	8550 (57.5)	6750 (60.6)
70					*4200 (9.2)	7250 (31.8)	7500 (42.1)	7650 (48.7)	7800 (54.4)	6050 (57.9)
75						6200 (24.3)	6400 (37.2)	6600 (44.8)	6700 (51.0)	5450 (55.0)
80						*4000 (12.8)	5500 (31.6)	5700 (40.5)	5800 (47.5)	4900 (52.1)
85							4750 (24.9)	4900 (35.8)	5000 (43.8)	4400 (49.0)
90							*3500 (15.3)	4200 (30.5)	4300 (39.8)	3900 (45.7)
95								3600 (24.1)	3700 (35.5)	3450 (42.2)
100								*2500 (14.9)	3150 (30.5)	3050 (38.4)
105									2650 (24.7)	2750 (34.3)
110									*2100 (16.8)	2350 (29.5)
115										*1650 (23.7)
120										*850 (15.8)
Minimum boom angle (°) for indicated length (no load)							0	5	8	10
Maximum boom length (ft) at 0° boom angle (no load)							97			

NOTE: ( ) Boom angles are in degrees.
*Loads are structurally limited.
#LMI operating code. Refer to LMI manual for operating instructions.

Lifting capacities at zero degree boom angle										
Boom angle	Main boom length in feet									
	31.7	43-A	54-B	64-C	75-D	86-E				
0°	11,750 (27.5)	6,800 (38.8)	4,250 (19.8)	3,200 (59.8)	1,750 (70.8)	750 (81.8)				

NOTE: ( ) Reference radii in feet. 80034850A

THIS CHART IS ONLY A GUIDE AND SHOULD NOT BE USED TO OPERATE THE CRANE.
The individual crane's load chart, operating instructions and other instructional plates must be read and understood prior to operating the crane.

Load chart

NBT50/55

7,9 m - 13,7 m (26 ft - 45 ft)	1361 kg (3000 lb)	100%	360°

Radius in feet	26 ft LENGTH		45 ft LENGTH	
	#0005 or #1005	#0007 or #1007	#0009 or #1009	#0011 or #1011
	0° OFFSET	30° OFFSET	0° OFFSET	30° OFFSET
50	6000 (72.6)			
55	5800 (70.8)			
60	5500 (69.0)			
65	5200 (67.0)	4900 (72.1)	4050 (70.4)	
70	4850 (65.0)	4650 (69.9)	4000 (68.8)	
75	4500 (62.9)	4400 (67.7)	3950 (67.2)	2800 (73.8)
80	4250 (60.8)	4150 (65.4)	3900 (65.6)	2700 (71.9)
85	3950 (58.6)	4000 (63.1)	3800 (63.9)	2650 (70.0)
90	3600 (56.2)	3800 (60.7)	3550 (62.0)	2600 (68.0)
95	3000 (53.6)	3550 (58.2)	3250 (59.9)	2550 (66.0)
100	2450 (50.9)	2950 (55.3)	3000 (57.8)	2500 (63.9)
105	2,000 (48.2)	2450 (51.5)	2700 (55.6)	2450 (61.8)
110	1600 (45.3)	1950 (49.1)	2400 (53.3)	2400 (59.5)
115	1200 (42.2)	1500 (45.8)	2000 (50.8)	2350 (57.2)
120	850 (39.0)	1100 (42.4)	1650 (48.3)	2200 (54.6)
125	550 (35.6)	750 (38.6)	1300 (45.6)	1800 (51.6)
130			1000 (42.8)	1450 (48.5)
135			700 (39.8)	1050 (45.2)
140			450 (36.7)	800 (41.7)
145				500 (37.9)
Min. boom angle for indicated length (no load)	34°	34°	36°	36°
Max. boom length at 0° boom angle (no load)	64 ft		64 ft	

NOTE: ( ) Boom angles are in degrees. 80034857B

#LMI operating code. Refer to LMI manual for instructions.

Boom extension capacity notes:

1. All capacities above the bold line are based on structural strength limitations.
2. 26 ft and 45 ft extension lengths may be used for single line lifting service.
3. Radii listed are for a fully extended boom with the boom extension erected. For main boom lengths less than fully extended, the rated loads are determined by boom angle. Use only the column which corresponds to the boom extension length and offset for which the machine is configured. For boom angles not shown, use the rating of the next lower boom angle.

   Warning: Operation of this machine with heavier loads than the capacities listed is strictly prohibited. Machine tipping with boom extension occurs rapidly and without advance warning.
4. Boom angle is the angle above or below horizontal of the longitudinal axis of the boom base section after lifting rated load.
5. Capacities listed are with outriggers properly extended and vertical jacks set only.

THIS CHART IS ONLY A GUIDE AND SHOULD NOT BE USED TO OPERATE THE CRANE.
The individual crane's load chart, operating instructions and other instructional plates must be read and understood prior to operating the crane.

Load chart

NBT50/55

7,9 m - 13,7 m (26 ft - 45 ft)	1361 kg (3000 lb)	100%	Over Rear

Radius in feet	26 ft LENGTH		45 ft LENGTH	
	#0006	#0008	#0010	#0012
	0° OFFSET	30° OFFSET	0° OFFSET	30° OFFSET
50	6000 (72.6)			
55	5800 (70.8)			
60	5500 (69.0)			
65	5200 (67.0)	4900 (72.1)	4050 (70.4)	
70	4850 (65.0)	4650 (69.9)	4000 (68.8)	
75	4500 (62.9)	4400 (67.7)	3950 (67.2)	2800 (73.8)
80	4250 (60.8)	4150 (65.4)	3900 (65.6)	2700 (71.9)
85	3950 (58.6)	4000 (63.1)	3800 (63.9)	2650 (70.0)
90	3800 (56.4)	3800 (60.7)	3550 (62.0)	2600 (68.0)
95	3650 (54.1)	3650 (58.3)	3250 (59.9)	2550 (66.0)
100	3150 (51.5)	3350 (55.6)	3000 (57.8)	2500 (63.9)
105	2600 (48.6)	2900 (52.6)	2700 (55.6)	2450 (61.8)
110	2100 (45.7)	2550 (49.6)	2500 (53.5)	2400 (59.5)
115	1700 (42.6)	2150 (46.3)	2300 (51.2)	2350 (57.2)
120	1350 (39.4)	1650 (42.8)	2050 (48.7)	2300 (54.7)
125	950 (35.9)	1200 (39.0)	1750 (46.1)	2250 (52.1)
130	650 (32.1)	850 (34.8)	1500 (43.4)	2100 (49.2)
135		450 (30.0)	1200 (40.4)	1700 (45.8)
140			900 (37.3)	*1350 (42.3)
145			650 (33.9)	*900 (38.3)
150				*600 (33.9)
Min. boom angle for indicated length (no load)	29°	30°	30°	31°
Max. boom length at 0° boom angle (no load)	64 ft		64 ft	

NOTE: ( ) Boom angles are in degrees. 80034858A

#LMI operating code. Refer to LMI manual for instructions.
*Capacities are structurally limited.

Boom extension capacity notes:

1. All capacities above the bold line are based on structural strength limitations.
2. 26 ft and 45 ft extension lengths may be used for single line lifting service.
3. Radii listed are for a fully extended boom with the boom extension erected. For main boom lengths less than fully extended, the rated loads are determined by boom angle. Use only the column which corresponds to the boom extension length and offset for which the machine is configured. For boom angles not shown, use the rating of the next lower boom angle.

   Warning: Operation of this machine with heavier loads than the capacities listed is strictly prohibited. Machine tipping with boom extension occurs rapidly and without advance warning.
4. Boom angle is the angle above or below horizontal of the longitudinal axis of the boom base section after lifting rated load.
5. Capacities listed are with outriggers properly extended and vertical jacks set only.

THIS CHART IS ONLY A GUIDE AND SHOULD NOT BE USED TO OPERATE THE CRANE.
The individual crane's load chart, operating instructions and other instructional plates must be read and understood prior to operating the crane.

NBT50/55

39,0 m (128 ft) | 0 kg (0 lb) | 100% | 360°

Radius in feet	#8001									
	Main boom length in feet									
	31.7	43-A	54-B	64-C	75-D	86-E	97-F	107-G	118-H	128
8	100,000 (68.1)									
10	92,100 (64.0)	40,050 (71.3)								
12	76,600 (59.8)	40,050 (68.5)	40,350 (73.3)							
15	60,600 (53.1)	40,050 (64.0)	40,350 (69.9)	40,300 (73.5)						
20	44,100 (40.2)	40,050 (56.2)	40,350 (64.2)	40,300 (68.8)	34,100 (72.5)					
25	31,650 (21.8)	34,250 (47.5)	34,750 (57.9)	35,050 (63.9)	30,100 (68.4)	22,650 (71.5)				
30		26,750 (37.3)	27,450 (51.2)	27,800 (58.6)	27,100 (64.2)	20,400 (68.0)	17,800 (71.2)			
35		19,550 (23.6)	20,200 (43.8)	20,550 (52.9)	20,900 (59.6)	18,500 (64.3)	16,300 (68.0)	14,700 (70.8)	12,900 (73.2)	
40			15,450 (35.1)	15,800 (46.9)	16,100 (54.9)	16,350 (60.5)	15,100 (64.8)	13,650 (68.0)	12,050 (70.8)	10,850 (73.0)
45			12,150 (23.9)	12,500 (40.1)	12,800 (49.8)	13,000 (56.3)	13,200 (61.4)	12,550 (65.0)	11,300 (68.2)	10,250 (70.8)
50				10,200 (33.1)	10,450 (45.0)	10,650 (52.5)	10,850 (58.1)	11,050 (61.9)	10,650 (65.8)	9650 (68.4)
55				8300 (23.3)	8550 (39.0)	8750 (47.9)	8950 (54.3)	9100 (58.9)	9250 (63.0)	8750 (65.9)
60					7050 (32.2)	7250 (43.1)	7400 (50.4)	7550 (55.4)	7700 (59.9)	7800 (63.3)
65					5800 (23.7)	6000 (37.7)	6150 (46.2)	6300 (51.9)	6400 (56.8)	6550 (60.5)
70					*4650 (9.2)	5000 (31.6)	5150 (41.7)	5250 (48.1)	5350 (53.6)	5450 (57.6)
75						4100 (24.0)	4250 (36.8)	4400 (44.2)	4500 (50.3)	4600 (54.6)
80						3400 (12.7)	3550 (31.2)	3650 (39.9)	3750 (46.8)	3800 (51.6)
85							2900 (24.5)	3000 (35.3)	3100 (43.1)	3150 (48.4)
90							2350 (15.0)	2450 (30.0)	2550 (39.1)	2600 (45.0)
95								1950 (23.6)	2050 (34.8)	2100 (41.5)
100								1500 (14.6)	1600 (29.9)	1650 (37.7)
105									1200 (24.0)	1250 (33.5)
110									850 (16.2)	900 (28.7)
115										600 (23.1)
Minimum boom angle (°) for indicated length (no load)							0	5	8	17
Maximum boom length (ft.) at 0° boom angle (no load)							97			

NOTE: ( ) Boom angles are in degrees.
*Loads are structurally limited.
#LMI operating code. Refer to LMI manual for operating instructions.

Lifting capacities at zero degree boom angle										
Boom angle	Main boom length in feet									
	31.7	43-A	54-B	64-C	75-D	86-E				
0°	12,900 (27.5)	7600 (38.8)	4850 (19.8)	3700 (59.8)	2200 (70.8)	1150 (81.8)				

NOTE: ( ) Reference radii in feet. 80034955

THIS CHART IS ONLY A GUIDE AND SHOULD NOT BE USED TO OPERATE THE CRANE.
The individual crane's load chart, operating instructions and other instructional plates must be read and understood prior to operating the crane.

Load chart

NBT50/55

39,0 m (128 ft) | Jib Stowed | 0 kg (0 lb) | 100% | 360°

Radius in feet	#8002									
	Main boom length in feet									
	31.7	43-A	54-B	64-C	75-D	86-E	97-F	107-G	118-H	128
8	98,850 (68.1)									
10	90,950 (64.0)	39,250 (71.3)								
12	75,450 (59.8)	39,250 (68.5)	39,250 (73.3)							
15	59,450 (53.1)	39,250 (64.0)	39,250 (69.9)	39,250 (73.5)						
20	42,950 (40.2)	39,250 (56.2)	39,250 (64.2)	39,250 (68.8)	33,650 (72.5)					
25	30,500 (21.8)	33,450 (47.5)	34,150 (57.9)	34,550 (63.9)	29,650 (68.4)	22,250 (71.5)				
30		25,950 (37.3)	26,850 (51.2)	27,300 (58.6)	26,650 (64.2)	20,000 (68.0)	17,450 (71.2)			
35		18,750 (23.6)	19,600 (43.8)	20,050 (52.9)	20,450 (59.6)	18,100 (64.3)	15,950 (68.0)	14,400 (70.8)	12,600 (73.2)	
40			14,850 (35.1)	15,300 (46.9)	15,650 (54.9)	15,950 (60.5)	14,750 (64.8)	13,350 (68.0)	11,750 (70.8)	10,600 (73.0)
45			11,550 (23.9)	12,000 (40.1)	12,350 (49.8)	12,600 (56.3)	12,850 (61.4)	12,250 (65.0)	11,000 (68.2)	10,000 (70.8)
50				9700 (33.1)	10,000 (45.0)	10,250 (52.5)	10,500 (58.1)	10,750 (61.9)	10,350 (65.8)	9400 (68.4)
55				7800 (23.3)	8100 (39.0)	8350 (47.9)	8600 (54.3)	8800 (58.9)	8950 (63.0)	8500 (65.9)
60					6600 (32.2)	6850 (43.1)	7050 (50.4)	7250 (55.4)	7400 (59.9)	7550 (63.3)
65					5350 (23.7)	5600 (37.7)	5800 (46.2)	6000 (51.9)	6100 (56.8)	6300 (60.5)
70					*4200 (9.2)	4600 (31.6)	4800 (41.7)	4950 (48.1)	5050 (53.6)	5200 (57.6)
75						3700 (24.0)	3900 (36.8)	4100 (44.2)	4200 (50.3)	4350 (54.6)
80						3000 (12.7)	3200 (31.2)	3350 (39.9)	3450 (46.8)	3550 (51.6)
85							2550 (24.5)	2700 (35.3)	2800 (43.1)	2900 (48.4)
90							2000 (15.0)	2150 (30.0)	2250 (39.1)	2350 (45.0)
95								1650 (23.6)	1750 (34.8)	1850 (41.5)
100								1200 (14.6)	1300 (29.9)	1400 (37.7)
105									900 (24.0)	1000 (33.5)
110									550 (16.2)	650 (28.7)
Minimum boom angle (°) for indicated length (no load)							0	5	8	17
Maximum boom length (ft) at 0° boom angle (no load)							97			

NOTE: ( ) Boom angles are in degrees.
*Loads are structurally limited.
#LMI operating code. Refer to LMI manual for operating instructions.

Lifting capacities at zero degree boom angle										
Boom angle	Main boom length in feet									
	31.7	43-A	54-B	64-C	75-D	86-E				
0°	11,750 (27.5)	6,800 (38.8)	4,250 (19.8)	3,200 (59.8)	1,750 (70.8)	750 (81.8)				

NOTE: ( ) Reference radii in feet. 80034956

THIS CHART IS ONLY A GUIDE AND SHOULD NOT BE USED TO OPERATE THE CRANE.
The individual crane's load chart, operating instructions and other instructional plates must be read and understood prior to operating the crane.

NBT50/55

39,0 m (128 ft) | 0 kg (0 lb) | 100% | Over Rear

Radius in feet	#8003									
	Main boom length in feet									
	31.7	43-A	54-B	64-C	75-D	86-E	97-F	107-G	118-H	128
8	100,000 (68.1)									
10	92,100 (64.0)	40,050 (71.3)								
12	76,600 (59.8)	40,050 (68.5)	40,350 (73.3)							
15	60,600 (53.1)	40,050 (64.0)	40,350 (69.9)	40,300 (73.5)						
20	44,100 (40.2)	40,050 (56.2)	40,350 (64.2)	40,300 (68.8)	34,100 (72.5)					
25	31,650 (21.8)	34,250 (47.5)	34,750 (57.9)	35,050 (63.9)	30,100 (68.4)	22,650 (71.5)				
30		27,050 (37.3)	27,500 (51.2)	27,800 (58.6)	27,100 (64.2)	20,400 (68.0)	17,800 (71.2)			
35		21,750 (23.6)	22,350 (43.8)	22,650 (53.0)	22,900 (59.7)	18,500 (64.3)	16,300 (68.0)	14,700 (70.8)	12,900 (73.2)	
40			17,550 (35.2)	17,900 (46.9)	18,150 (54.9)	17,050 (60.5)	15,100 (64.8)	13,650 (68.0)	12,050 (70.8)	10,850 (73.0)
45			14,100 (24.0)	14,450 (40.2)	14,700 (49.9)	14,900 (56.5)	14,000 (61.5)	12,550 (65.0)	11,300 (68.2)	10,250 (70.8)
50				11,850 (32.3)	12,100 (44.5)	12,300 (52.2)	12,450 (57.9)	11,750 (62.0)	10,650 (65.8)	9650 (68.4)
55				9950 (23.3)	10,200 (39.1)	10,400 (48.1)	10,550 (54.5)	10,700 (59.1)	10,000 (63.2)	8750 (65.9)
60					8550 (32.3)	8750 (43.2)	8900 (50.6)	9050 (55.7)	9200 (60.3)	7850 (63.3)
65					7250 (23.8)	7400 (37.8)	7550 (46.4)	7700 (52.2)	7850 (57.2)	7000 (60.6)
70					*4650 (9.2)	6300 (31.7)	6450 (41.9)	6550 (48.4)	6700 (54.0)	6300 (57.9)
75						5350 (24.2)	5500 (37.0)	5600 (44.5)	5750 (50.7)	5700 (55.0)
80						*4400 (12.8)	4700 (31.4)	4800 (40.2)	4900 (47.2)	5000 (52.0)
85							4000 (24.7)	4100 (35.5)	4200 (43.5)	4300 (48.8)
90							3350 (15.2)	3450 (30.2)	3550 (39.5)	3650 (45.5)
95								2900 (23.8)	3000 (35.1)	3100 (41.9)
100								2450 (14.8)	2550 (30.2)	2600 (38.1)
105									2100 (24.4)	2150 (33.9)
110									1700 (16.5)	1750 (29.1)
115										1400 (23.5)
120										*1100 (15.8)
Minimum boom angle (°) for indicated length (no load)							0	5	8	10
Maximum boom length (ft) at 0° boom angle (no load)							97			

NOTE: ( ) Boom angles are in degrees.
*Loads are structurally limited.
#LMI operating code. Refer to LMI manual for operating instructions.

Lifting capacities at zero degree boom angle										
Boom angle	Main boom length in feet									
	31.7	43-A	54-B	64-C	75-D	86-E				
0°	12,900 (27.5)	7600 (38.8)	4850 (19.8)	3700 (59.8)	2200 (70.8)	1150 (81.8)				

NOTE: ( ) Reference radii in feet. 80034959

THIS CHART IS ONLY A GUIDE AND SHOULD NOT BE USED TO OPERATE THE CRANE.
The individual crane's load chart, operating instructions and other instructional plates must be read and understood prior to operating the crane.

Load chart

NBT50/55

39,0 m (128 ft) | Jib Stowed | 0 kg (0 lb) | 100% | Over Rear

Radius in feet	#8004									
	Main boom length in feet									
	31.7	43-A	54-B	64-C	75-D	86-E	97-F	107-G	118-H	128
8	98,850 (68.1)									
10	90,950 (64.0)	39,250 (71.3)								
12	75,450 (59.8)	39,250 (68.5)	39,250 (73.3)							
15	59,450 (53.1)	39,250 (64.0)	39,250 (69.9)	39,250 (73.5)						
20	42,950 (40.2)	39,250 (56.2)	39,250 (64.2)	39,250 (68.8)	33,650 (72.5)					
25	30,500 (21.8)	33,450 (47.5)	34,150 (57.9)	34,550 (63.9)	29,650 (68.4)	22,250 (71.5)				
30		26,250 (37.3)	26,900 (51.2)	27,300 (58.6)	26,650 (64.2)	20,000 (68.0)	17,450 (71.2)			
35		20,950 (23.6)	21,750 (43.8)	22,150 (53.0)	22,450 (59.7)	18,100 (64.3)	15,950 (68.0)	14,400 (70.8)	12,600 (73.2)	
40			16,950 (35.2)	17,400 (46.9)	17,700 (54.9)	16,650 (60.5)	14,750 (64.8)	13,350 (68.0)	11,750 (70.8)	10,600 (73.0)
45			13,500 (24.0)	13,950 (40.2)	14,250 (49.9)	14,500 (56.5)	13,650 (61.5)	12,250 (65.0)	11,000 (68.2)	10,000 (70.8)
50				11,350 (32.3)	11,650 (44.5)	11,900 (52.2)	12,100 (57.9)	11,450 (62.0)	10,350 (65.8)	9400 (68.4)
55				9450 (23.3)	9750 (39.1)	10,000 (48.1)	10,200 (54.5)	10,400 (59.1)	9700 (63.2)	8500 (65.9)
60					8100 (32.3)	8350 (43.2)	8550 (50.6)	8750 (55.7)	8900 (60.3)	7600 (63.3)
65					6800 (23.8)	7000 (37.8)	7200 (46.4)	7400 (52.2)	7550 (57.2)	6750 (60.6)
70					*4200 (9.2)	5900 (31.7)	6100 (41.9)	6250 (48.4)	6400 (54.0)	6050 (57.9)
75						4950 (24.2)	5150 (37.0)	5300 (44.5)	5450 (50.7)	5450 (55.0)
80						*4000 (12.8)	4350 (31.4)	4500 (40.2)	4600 (47.2)	4750 (52.0)
85							3650 (24.7)	3800 (35.5)	3900 (43.5)	4050 (48.8)
90							3000 (15.2)	3150 (30.2)	3250 (39.5)	3400 (45.5)
95								2600 (23.8)	2700 (35.1)	2850 (41.9)
100								2150 (14.8)	2250 (30.2)	2350 (38.1)
105									1800 (24.4)	1900 (33.9)
110									1400 (16.5)	1500 (29.1)
115										1150 (23.5)
120										*850 (15.8)
Minimum boom angle (°) for indicated length (no load)							0	5	8	10
Maximum boom length (ft.) at 0° boom angle (no load)							97			

NOTE: ( ) Boom angles are in degrees.
*Loads are structurally limited.
#LMI operating code. Refer to LMI manual for operating instructions.

Lifting capacities at zero degree boom angle										
Boom angle	Main boom length in feet									
	31.7	43-A	54-B	64-C	75-D	86-E				
0°	11,750 (27.5)	6800 (38.8)	4250 (19.8)	3200 (59.8)	1750 (70.8)	750 (81.8)				

NOTE: ( ) Reference radii in feet.

80034960

THIS CHART IS ONLY A GUIDE AND SHOULD NOT BE USED TO OPERATE THE CRANE.
The individual crane's load chart, operating instructions and other instructional plates must be read and understood prior to operating the crane.

NBT50/55

7,9 m - 13,7 m (26 ft - 45 ft) | 0 kg (0 lb) | 100% | 360°

Radius in feet	26 ft LENGTH		45 ft LENGTH	
	#8005	#8007	#8009	#8011
	0° OFFSET	30° OFFSET	0° OFFSET	30° OFFSET
50	6000 (72.6)			
55	5800 (70.8)			
60	5500 (69.0)			
65	5200 (67.0)	4900 (72.1)	4050 (70.4)	
70	4850 (65.0)	4650 (69.9)	4000 (68.8)	
75	4500 (62.9)	4400 (67.7)	3950 (67.2)	2800 (73.8)
80	3700 (60.5)	4150 (65.4)	3900 (65.6)	2700 (71.9)
85	3000 (58.0)	3750 (63.0)	3800 (63.9)	2650 (70.0)
90	2400 (55.4)	3050 (60.2)	3350 (61.8)	2600 (68.0)
95	1900 (52.8)	2400 (57.3)	2750 (59.4)	2550 (66.0)
100	1450 (50.2)	1950 (54.5)	2250 (57.1)	2500 (63.9)
105	1000 (47.4)	1450 (51.5)	1800 (54.7)	2450 (61.8)
110	650 (44.5)	1000 (48.4)	1450 (52.3)	2200 (59.3)
115		650 (45.2)	1100 (49.8)	1750 (56.5)
120			750 (47.2)	1350 (53.7)
125			450 (44.5)	1000 (50.7)
130				650 (47.7)
Min. boom angle for indicated length (no load)	43°	43°	44°	45°
Max. boom length at 0° boom angle (no load)	64 ft		64 ft	

NOTE: ( ) Boom angles are in degrees. 80034967

#LMI operating code. Refer to LMI manual for instructions.

Boom extension capacity notes:

1. All capacities above the bold line are based on structural strength limitations.
2. 26 ft and 45 ft extension lengths may be used for single line lifting service.
3. Radii listed are for a fully extended boom with the boom extension erected. For main boom lengths less than fully extended, the rated loads are determined by boom angle. Use only the column which corresponds to the boom extension length and offset for which the machine is configured. For boom angles not shown, use the rating of the next lower boom angle.

   Warning: Operation of this machine with heavier loads than the capacities listed is strictly prohibited. Machine tipping with boom extension occurs rapidly and without advance warning.
4. Boom angle is the angle above or below horizontal of the longitudinal axis of the boom base section after lifting rated load.
5. Capacities listed are with outriggers properly extended and vertical jacks set only.

THIS CHART IS ONLY A GUIDE AND SHOULD NOT BE USED TO OPERATE THE CRANE.
The individual crane's load chart, operating instructions and other instructional plates must be read and understood prior to operating the crane.

Load chart

NBT50/55

7,9 m - 13,7 m (26 ft - 45 ft)	0 kg (0 lb)	100%	Over Rear

Radius in feet	26 ft LENGTH		45 ft LENGTH	
	#8006	#8008	#8010	#8012
	0° OFFSET	30° OFFSET	0° OFFSET	30° OFFSET
50	6000 (72.6)			
55	5800 (70.8)			
60	5500 (69.0)			
65	5200 (67.0)	4900 (72.1)	4050 (70.4)	
70	4850 (65.0)	4650 (69.9)	4000 (68.8)	
75	4500 (62.9)	4400 (67.7)	3950 (67.2)	2800 (73.8)
80	4250 (60.8)	4150 (65.4)	3900 (65.6)	2700 (71.9)
85	3950 (58.6)	4000 (63.1)	3800 (63.9)	2650 (70.0)
90	3450 (56.1)	3800 (60.7)	3550 (62.0)	2600 (68.0)
95	2900 (53.6)	3450 (58.1)	3250 (59.9)	2550 (66.0)
100	2400 (50.9)	2850 (55.2)	3000 (57.8)	2500 (63.9)
105	1900 (48.1)	2350 (52.2)	2700 (55.6)	2450 (61.8)
110	1500 (45.2)	1950 (49.1)	2300 (53.2)	2400 (59.5)
115	1150 (42.2)	1450 (45.8)	1900 (50.7)	2350 (57.2)
120	800 (39.0)	1050 (42.3)	1550 (48.1)	2150 (54.5)
125	500 (35.5)	700 (38.6)	1250 (45.5)	1750 (51.5)
130		400 (34.5)	950 (42.7)	1400 (48.5)
135			650 (39.7)	1050 (45.2)
140			450 (36.7)	750 (41.7)
145				450 (37.9)
Min. boom angle for indicated length (no load)	34°	34°	36°	37°
Max. boom length at 0° boom angle (no load)	64 ft		64 ft	

NOTE: ( ) Boom angles are in degrees. 80034968

#LMI operating code. Refer to LMI manual for instructions.
*Capacities are structurally limited.

Boom extension capacity notes:

1. All capacities above the bold line are based on structural strength limitations.
2. 26 ft and 45 ft extension lengths may be used for single line lifting service.
3. Radii listed are for a fully extended boom with the boom extension erected. For main boom lengths less than fully extended, the rated loads are determined by boom angle. Use only the column which corresponds to the boom extension length and offset for which the machine is configured. For boom angles not shown, use the rating of the next lower boom angle.

   Warning: Operation of this machine with heavier loads than the capacities listed is strictly prohibited. Machine tipping with boom extension occurs rapidly and without advance warning.
4. Boom angle is the angle above or below horizontal of the longitudinal axis of the boom base section after lifting rated load.
5. Capacities listed are with outriggers properly extended and vertical jacks set only.

THIS CHART IS ONLY A GUIDE AND SHOULD NOT BE USED TO OPERATE THE CRANE.
The individual crane's load chart, operating instructions and other instructional plates must be read and understood prior to operating the crane.

Accessories

Radio Remote Controls – Eliminate the handling and maintenance concerns that accompany cabled remotes. Operate to a range of about 76 m (250 ft), varying with conditions. Remote transmitter displays LMI information on LCD screen.	**• NB6R**
Personnel Baskets – Two person baskets, gravity hung with swing lock and full body harness. Fast attachment and secure locking systems. Ratings from 181 kg (400 lb) to 544 kg (1200 lb)	**• BSA-1** **• BSA-R1** **• BSAY-2**
Auxiliary Winch – Second winch redundant to the main, 15,000 lb gear set, two-speed piston motor, cable packer, grooved drum, DRI standard with 5/8 in Dyform 34LR wire rope	**• AW**
Spanish-Language Danger Decals, **Control Knobs, and Operators' Manuals**	**• SDD** **• SOM**
Rotation Bearing Lock Manual applied lock on rotation bearing (360° positioning)	**•MRL**
Metric Capacity Charts	**•MCC**
Dual-Axis Electronic Joysticks In place of single-axis joysticks	**•DAJS**
Special Paint One color in lieu of standard paint color-non metallic	**•SPECIAL PAINT**
Auxiliary access step	**•AAS**

Manitowoc Cranes

Regional headquarters

Americas
Manitowoc, Wisconsin, USA
Tel: +1 920 684 6621
Fax: +1 920 683 6277

Shady Grove, Pennsylvania, USA
Tel: +1 717 597 8121
Fax: +1 717 597 4062

Europe, Middle East, Africa
Dardilly, France
Tel: +33 (0)4 72 18 20 20
Fax: +33 (0)4 72 18 20 00

China
Shanghai, China
Tel: +86 21 6457 0066
Fax: +86 21 6457 4955

Greater Asia-Pacific
Singapore
Tel: +65 6264 1188
Fax: +65 6862 4040

Regional offices

Americas
Brazil
Alphaville
Mexico
Monterrey
Chile
Santiago

Europe, Middle East, Africa
France
Baudemont
Cergy
Decines
Germany
Langenfeld
Italy
Lainate
Netherlands
Breda
Poland
Warsaw
Portugal
Baltar
Russia
Moscow
South Africa
Johannesburg
U.A.E.
Dubai
U.K.
Buckingham

China
Beijing
Chengdu
Guangzhou
Xian

Greater Asia-Pacific
Australia
Brisbane
Melbourne
Sydney
India
Chennai
Delhi
Hyderabad
Pune
Korea
Seoul
Philippines
Makati City
Singapore

Factories

Brazil
Passo Fundo
China
TaiAn
Zhangjiagang
France
Charlieu
Moulins
Germany
Wilhelmshaven
India
Pune
Italy
Niella Tanaro
Portugal
Baltar
Fânzeres
USA
Manitowoc
Port Washington
Shady Grove

This document is non-contractual. Constant improvement and engineering progress make it necessary that we reserve the right to make specification, equipment, and price changes without notice. Illustrations shown may include optional equipment and accessories and may not include all standard equipment.

©2014 Manitowoc
Form No.Series NBT50 PG
Part No. 09-009 / 0314 / 2M